OWNER'S MANUAL

AXOPAR 29 CCX

MODEL YEAR 2024-2026

AXOPAR

Table of Contents

1 Introduction....5

1.1 Purpose of this manual....5
1.2 Safety symbols....5
1.3 Document conventions....6
1.4 Copyright....6
1.5 Disclaimer....6
1.6 Warranty....7

2 Safety....8

2.1 Safe and responsible boat operation....8
2.2 Safety diagram....10
2.3 Fire protection and control....10
2.3.1 Fire control equipment....11
2.3.2 Boat owners' and users' responsibilities....11
2.3.3 Checklist: Fire in the engine....12
2.3.4 Checklist: After fire....12
2.4 Carbon monoxide....12
2.5 Carbon monoxide monitor....14
2.6 Smoke alarm....14
2.7 Life raft....15
2.8 Safety labels on board....15

3 Product overview....26

3.1 Purpose of use....26
3.2 Identification....26
3.3 Builder's plate....27
3.4 CE certification....28
3.5 Dimensions and weight....29
3.6 Boat layout....31

4 Product description....33

4.1 Stability and buoyancy....33
4.1.1 Self-draining systems....33
4.1.2 Openings in the hull and deck....34
4.1.3 Bilge system....36
4.1.3.1 Bilge pumps....38
4.2 Technical systems....38
4.2.1 Electrical system....38
4.2.2 12V system....39

© 2025 Axopar Boats

4.2.3 Main switches....40
4.2.4 Direct supply fuses....41
4.2.5 Fuses....41
4.2.6 Heavy duty fuses....42
4.2.7 Batteries....43
4.2.7.1 Charging the batteries....43
4.2.7.2 Winter storage....43
4.2.7.3 Cleaning the batteries....44
4.2.8 110/230V system....44
4.2.9 Fuel system....45
4.2.9.1 Refueling the boat....46
4.2.9.2 Maintaining the fuel system....47
4.3 Optional equipment....47
4.3.1 Freshwater system....47
4.3.2 Raw water system....49
4.3.3 Wet bar in port fender box....50
4.3.4 Septic system....50
4.3.4.1 Toilet seat....51
4.3.4.2 Septic tank....52
4.3.5 Navigation system....52
4.3.5.1 VHF equipment....53
4.3.6 Bow thruster....53
4.3.7 Anchor windlass....53
4.3.8 LPG system....55
4.3.8.1 Using the LPG cooker....55
4.3.9 Work lights....57
4.3.10 Searchlight....58
4.3.11 Solar panel trickle charger....58
4.3.12 Gas grill....58
4.3.13 Fishing gear....59
4.3.14 Bait livewell options....60
4.3.14.1 Main bait livewell with tackle station....60
4.3.14.2 Fender box livewell....61
4.3.15 Deck wash pump....61
4.3.16 Sunshades....62
4.3.17 Canopy....62
4.3.18 Folding aft leaning post....63
4.3.19 Axopar connectivity....64
5 Transportation....65
5.1 Lifting the boat....65
5.2 Transporting and storing the boat....66

© 2025 Axopar Boats

6 Operation 68
6.1 Handling devices 68
6.1.1 Steering console 68
6.1.2 Steering console switch panel 70
6.1.3 Windscreen wipers 70
6.1.4 Steering system 70
6.1.4.1 Checking and topping up oil 70
6.1.4.2 Steering maintenance 71
6.1.5 Throttle lever 71
6.1.5.1 Trim and tilt 71
6.1.6 Starting the engine 71
6.1.7 Joystick piloting 72
6.2 Swivel seat - Driver and passenger seats 73
6.3 Inspecting the boat 73
6.3.1 Checklist: Regular inspection before leaving harbor 73
6.3.2 Checklist: After using the boat 74
6.4 Handling the boat 74
6.4.1 Checklist: Boat handling before leaving harbor 74
6.4.2 Leaving the jetty 75
6.4.3 Driving the boat 75
6.4.3.1 Dead man's switch 76
6.4.3.2 Driving at high speed 76
6.4.3.3 Driving in rough seas 77
6.4.3.4 Maneuvering in narrow channels 77
6.4.4 Visibility from steering position 78
6.4.5 Using the trim tabs 78
6.5 Preventing falling overboard 78
6.6 Anchoring, docking and mooring 79
6.6.1 Fastening points 79
6.6.2 Docking 80
6.6.3 Checklist: Before anchoring 81
6.6.4 Towing and mooring 81

7 Maintenance 82
7.1 Cleaning and maintaining the gelcoat surface 82
7.2 Antifouling 84
7.3 Maintaining the interiors 85
7.3.1 Wooden interiors 85
7.3.2 Plastic and painted surfaces 85
7.3.3 Fabrics 85
7.3.4 Doors and hatches 85
7.4 Maintaining the cover 85
7.4.1 Cleaning the cover 86

© 2025 Axopar Boats

7.5 Protecting underwater metal parts.... 86
7.6 Preventing corrosion.... 87
7.7 Preventing frost damage.... 87
7.8 Checklist: Before winter lay-up.... 87
7.9 Checklist: Before launching.... 88
7.10 Corrective maintenance.... 88
7.10.1 Deposits.... 88
7.10.2 Scratches and nicks.... 89
7.10.3 Stains.... 89
7.10.4 Deep marks, gouges and holes.... 89

8 Environment.... 90

8.1 Requirements for North America.... 90

9 Appendix I: Checklists.... 92

9.1 Checklist: Fire in the engine.... 92
9.2 Checklist: After fire.... 92
9.3 Checklist: Regular inspection before leaving harbor.... 92
9.4 Checklist: After using the boat.... 93
9.5 Checklist: Boat handling before leaving harbor.... 93
9.6 Checklist: Before anchoring.... 94
9.7 Checklist: Before winter lay-up.... 94
9.8 Checklist: Before launching.... 95
9.9 Maintenance log.... 95

10 Appendix II: Fuel system.... 97

10.1 Fuel system: USA (EPA).... 98

11 Appendix III: Electrical diagrams.... 99

12 Appendix IV: AIS Decontamination – North America.... 100

13 Appendix V: Transport dimensions.... 101

14 Appendix VI: Warranty terms.... 102

14.1 Warranty terms: US.... 103
14.2 Warranty terms: non-US.... 104

© 2025 Axopar Boats

1 Introduction

1.1 Purpose of this manual

This owner's manual contains important information and instructions for using your boat.

In this owner's manual you can find important information that help you handle and maintain your boat. The manual contains detailed information about the boat and the systems installed, and general information about handling and taking care of the boat. The latest version of the manual is available in electronic format at the manufacturer's website.

Read the manual carefully and familiarize yourself with your boat before you start to use it. Also ensure that the anticipated wind and wave conditions correspond to the design category of your boat, and that you and your crew are able to handle the boat in these conditions.

This owner's manual is not a substitute for boating safety skills or good seamanship.

If this is your first boat or if this boat type is new to you, ensure you can handle the boat before you set out for the first time.

For information about local sea schools and approved instructors, please ask your boat dealer, the local boat clubs and national motorboat or yacht federations for advice. They can also provide information on specific local regulations on issues such as a driving licence or authorization, registration, insurance, and safety equipment.

This owner’s manual is not a detailed maintenance or troubleshooting guide. If problems occur, contact the boat manufacturer or its local representative. When you are in need of maintenance or repair and alteration work, always turn to competent and trained professionals. Changes that can affect the boat’s security features must be assessed, carried out and documented by competent professionals. The boat manufacturer cannot be held responsible for unauthorized modifications. Every change to the boat’s center of gravity (from highly mounted heavy equipment or a new type etc.) significantly affects the stability, trim and performance of the boat.

Keep this manual in a safe place and pass it on to the new owner if you sell your boat. If the manual is mislaid or destroyed, a copy can be ordered from your dealer or downloaded from the manufacturer's website.

See the purchase agreement or order for the scope of your purchase. In case something does not work satisfactorily with your boat or its equipment, you can check the service documents for possible service and repair measures. If uncertain, always contact your dealer.

1.2 Safety symbols

This owner's manual contains danger, warning, caution and notice statements informing the user or authorized service representatives of any potential harm to the product or person.

Hazard is defined as a source of potential injury to a person.

All abnormal use is forbidden, including disregarding information on safety.

© 2025 Axopar Boats

⚠ DANGER	**Danger** indicates an imminently hazardous situation which, if not avoided, **will result in death or serious injury**.
⚠ WARNING	**Warning** indicates a potentially hazardous situation which, if not avoided, **could result in death or serious injury**.
⚠ CAUTION	**Caution** indicates a potentially hazardous situation which, if not avoided, **might result in minor or moderate injury**.
NOTICE	**Notice** indicates a potential situation which, if not avoided, **might result in property damage or in an undesirable result or state**.
ℹ	The information icon calls attention to information that clarifies or simplifies a procedure.

1.3 Document conventions

Units

This manual uses SI units in accordance with ISO 1000. In some cases, other units may have been used alongside.

An exception is the wind velocity, which in the Recreational Boat Directive is given in the Beaufort Scale.

Terminology

In this manual, the right side of the hull is referred to as starboard and the left side as port.

1.4 Copyright

Copyright ©2025 Axopar Boats. All rights reserved.

This Owner's Manual is protected by copyright controlled by Axopar Boats. This manual cannot be wholly or partly reproduced without prior written authorization by Axopar Boats. This material also contains confidential information, which may not be disclosed to others without the prior written consent of Axopar Boats.

1.5 Disclaimer

The material in this manual is for information purposes only.

Axopar Boats reserves the right to change the products without prior notice to improve reliability, function, design or other characteristics of the products. Axopar Boats assumes no liability for any damages, losses, costs or expenses arising out of or relating to the use of this manual or the products described herein.

Axopar Boats makes no representations and warranties with respect to this manual, either express or implied, including, but not limited to, the implied warranties of merchantability and fitness for a particular purpose.

1.6 Warranty

The Limited Warranty for the boat and the relevant contact information are enclosed as a separate document.

For any warranty claims, please contact your Axopar dealer mentioned on the cover page.

© 2025 Axopar Boats

2 Safety

⚠ WARNING

The boat owner is responsible for making sure that the safety equipment on the boat meets the rules and regulations of the local authorities.

- Keep the necessary safety equipment up to date and on the boat at all times.

Check the preferred location of the major safety equipment in the section ***Safety diagram***.

⚠ WARNING

Overloading the boat can damage the engine, even when shut off.

- When loading the boat, never exceed the maximum recommended load of the boat shown in the builder's plate.
- Always load the boat carefully and distribute loads appropriately to maintain design trim.
- Avoid placing heavy equipment or material high up in the boat.

The liquids in the built-in tanks are not included in the maximum load shown on the builder's plate.

⚠ WARNING

When out on the water, always use the seats intended for the passengers.

Do not exceed the maximum number of persons allowed in the boat, shown in the builder's plate.

The total weight of the persons on board and their personal luggage must never exceed the maximum load of the boat shown in the builder's plate.

⚠ CAUTION

Risk of personal injury and risk of damage to the roof or roof structures.

Do not place or attach any load or equipment on the roof or to the roof structures if there is no specific roof rack.

It is forbidden to enter the roof or dangle from the roof structures.

2.1 Safe and responsible boat operation

Please familiarize yourself to these safety aspects before using the boat.

The person controlling the boat is in charge of the safety of all the passengers as well as other seafarers.

⚠ CAUTION

The owner is responsible for ensuring that the normal mode of operation is maintained. This means that the speed of the craft needs to be matched to the prevailing sea state, the craft being used "with good seamanship behaviour."

Neglecting these safety rules might lead to serious injury or death.

© 2025 Axopar Boats

- Anyone who controls the boat must be competent to operate a boat of this type and size.
- The boat must not be controlled by an unqualified operator or by an operator under the influence of alcohol, drugs or other substance which impair judgement.
- The boat must always be operated at speeds that will not put people or property in danger.
- The captain must constantly be aware of conditions surrounding the boat when underway and especially before sharp turns.
- In challenging conditions such as rough water and winds, impaired visibility, and congested waterways; reduce speed, use appropriate navigation equipment and lights, and use a lookout to identify possible hazards.
- Pay attention to your wake. It can endanger smaller boats or damage moored boats or other property. You are responsible for damage caused by your wake.
- Only allow passengers to ride in areas that do not pose a hazard to themselves or the boat.
- Do not allow passengers to ride on aft folding seats, aft fender boxes or gunwales.
- Passengers must remain seated while the boat is moving.
- Use of alcohol, drugs, or other judgment-impairing substances poses a serious threat to yourself and others. The boat operator is responsible for the behaviour of people on board.
- For every passenger on board, the boat must carry one wearable personal flotation device (PFD).

⚠ WARNING

Speed hazard

This is a high-performance vessel; the speed of the craft needs to be adapted to the environment. To ensure your passengers' safety and comfort, avoid sharp turns in speeds exceeding 40 knots. Never operate your boat at speeds which exceed your ability to react to surprising and unpredictable situations. The captain is always responsible for operating the vessel in a safe way.

⚠ WARNING

Never operate a boat at a speed at which you do not feel comfortable.

⚠ DANGER

Slipping hazard

Deck might be slippery when wet, even on non-skid areas. Be extremely cautious on slippery surfaces and wear suitable footwear.

⚠ DANGER

Do not go out boating in severe weather conditions as this might lead to serious injuries or death. Always get back to shore before the weather turns bad.

© 2025 Axopar Boats

2.2 Safety diagram

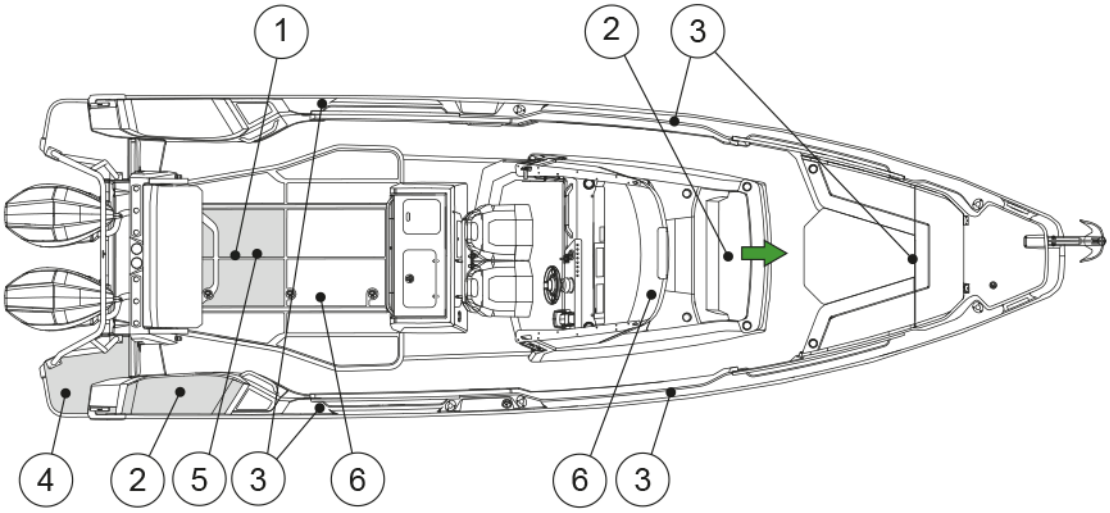

(1) Life raft storage
(2) Fire extinguisher
(3) Hooking points for safety harness
(4) Swim ladder
(5) Fire extinguisher (optional)
(6) CO monitor and smoke alarm (also in optional aft cabin)

2.3 Fire protection and control

The most common fire sources are the engine and the stove. If there is a fire in the boat, it may result in an explosion.

⚠ WARNING

Fire usually spreads very fast — be quick to extinguish the fire with the fire extinguisher on the boat!

See the section ***Safety diagram*** for the exact location of the fire extinguisher(s).

If the fire starts to get out of control, leave the burning boat to save lives.

⚠ WARNING

Always put down the fire by depriving the fire of oxygen.

Do not use water!

Using water in fire involving flammable liquids can spread the liquid and make the fire worse.

© 2025 Axopar Boats

⚠ WARNING If the fire reaches the fuel tank, an explosion may occur and cause a large area around the boat to burn.

- Keep the bilge clean and check it regularly for fuel and gas fumes or fuel and oil leaks.
- Do not hang curtains or other flammable material near or above any equipment with naked flames.
- Never refuel or replace gas containers when the engines are running.
- Never smoke when handling fuel or gas.
- Never block evacuation routes or emergency exits.
- Never block access to safety equipment such as fuel valves or main power switches.
- Never block access to fire extinguishers, visible or concealed.
- Never modify the boat's systems (especially electrical, fuel or gas systems).

2.3.1 Fire control equipment

Check the exact locations of the fire control equipment in the section ***Safety diagram***.

Fire extinguishers

You must fit the boat with hand-held fire extinguishers. The fire ratings of the fire extinguishers must be at least as follows:

- Starboard fender box: 2x8A/68B (USCG: 5-B)
- Near driver's seat, under feet support, multicabin and an optional aft cabin: 8A/68B (USCG: 5-B).

Check the exact locations of the fire extinguishers in the section ***Safety diagram***.

The fire extinguishers are not included in the manufacturer's delivery. Before using the boat, it must be furnished with fire extinguishers.

Fire blanket

A fire blanket is ideal for putting out small fires and also one of the best options if a person's clothes catch fire.

- Keep a fire blanket onboard in an easily accessible place.

2.3.2 Boat owners' and users' responsibilities

It is your responsibility as the boat owner and user to ensure that the fire control equipment is accessible at all times.

© 2025 Axopar Boats

- Check the fire extinguishing equipment regularly at the intervals specified for the equipment.
- Replace equipment with expired date immediately with equivalent or better equipment.
- Advice the crew and guests of the location and instructions for use of the fire control equipment, and the location of evacuation routes and emergency exits.

2.3.3 Checklist: Fire in the engine

- Stop the engine.
- Steer the boat up against the wind, if possible.
- Make sure all passengers have life jackets.
- If necessary:
  - Evacuate the passengers.
  - Call for sea rescue.
- Extinguish the fire.
- Wait until fully certain that the fire has been extinguished before opening the engine cover.

  Carefully open the engine cover and be prepared to use the handheld fire extinguisher if necessary for post-fire extinguishing.
- Put out possible smoldering fires with water.

2.3.4 Checklist: After fire

- Open doors and windows for better ventilation.
- Inspect the boat and its equipment, and repair any damages.
- Contact local authorities, if needed.
- Make sure that the fire extinguishing equipment is refilled or replaced after use.

2.4 Carbon monoxide

⚠ WARNING

Carbon monoxide (CO) is colorless, odorless, tasteless, and extremely dangerous gas.

All engines, generators, and fuel burning appliances produce CO as exhaust.

Prolonged exposure to low concentrations or very quick exposure to high concentrations may cause brain damage or death.

Open all doors, curtains, windows, and hatches to let fresh air circulate when running an engine or generator or burning any fuel while the boat is anchored, moored or docked.

If you can smell engine or generator exhaust, you are inhaling CO. CO can also be present without the smell of exhaust fumes.

© 2025 Axopar Boats

⚠ WARNING

If the CO alarm is activated, make sure all persons onboard exit the closed spaces.

- If exhaust fumes are detected or if CO accumulation is suspected on the boat, take immediate action to ventilate these fumes.
- Turn off all engines and generators.
- Open all hatches, windows and ports to ventilate.

Changing course and speed to place the boat heading into the wind can improve ventilation.

Symptoms of carbon monoxide poisoning are dizziness, ears ringing, headache, nausea and unconsciousness. A poisoning victim's skin often turns cherry red.

Because the carbon monoxide gas is odorless, colorless and tasteless, it is unlikely to be noticed until a person is affected.

⚠ DANGER

- If CO poisoning is suspected, have the victim breath fresh air deeply.
- If breathing stops, resuscitate.
- A victim often revives, but then relapses because organs are damaged by the lack of oxygen.

  Seek immediate medical attention.

High levels of carbon monoxide may accumulate in the following ways:

- Blocking hull exhausts while operating at slow speed or if exhausts are submerged.
- Using canvas curtains.
- Winds blowing exhaust toward boat occupants.
- Operating engine or generator in a confined space.
- Operating with the bow high.

Dangerous concentrations of carbon monoxide are present if:

- the engine or generator exhaust systems leak
- insufficient fresh air is circulating where people are present
- fumes move from the rear of the boat into the cockpit and cabin area.

To minimize the danger of CO accumulation when the engine and generator are running or when using burning fuel applications:

- Be sure to have sufficient ventilation when using canvas or window-type side curtains when underway, anchored, moored or docked.
- Operate all burning fuel appliances, such as charcoal, propane, LPG, CNG or alcohol cooking devices, in areas where fresh air can circulate. Do not use such devices where there is no noticeable air movement, especially in the cabin, when anchored, moored or docked.
- Do not idle the engine without moving the boat for more than 15 minutes at a time.
- Inspect the exhaust system regularly. See the manufacturer's manual for instructions.

© 2025 Axopar Boats

2.5 Carbon monoxide monitor

There is a carbon monoxide monitor system in the boat.

The carbon monoxide monitors are located in all accommodation areas of the boat.

- With regular intervals, check that the monitor system is functioning. For instructions, see the equipment manufacturer's manual.
- It is not possible to turn the CO monitor off when the boat is in use.

See here the description of the audible and visual signals of the monitor.

Low battery voltage can trigger the carbon monoxide monitor to sound an alarm.

Operation	Audible Signal	Visual Signal
Normal	None	Green led flashes every minute
CO alarm	4 beeps, 5 seconds off - cycle repeats	Flashing red
Alarm malfunction	Beep every 30 seconds	Alternating red/green flash
End of life signal	Beep every 25-30 second	Red red green green flash sequence

2.6 Smoke alarm

Boat is equipped with smoke alarms.

Smoke alarm is battery powered. When the battery level reaches low level, the smoke alarm will start emitting low battery warning signal.

Smoke alarm may give false alarm if there is steam, condensation, or normal smoke or fumes in its vicinity.

The smoke alarm has a built-in hush or silence feature incorporated into the test button. This feature can be useful when unwanted alarm is caused by cooking or other non-hazardous sources trigger the alarm. Hush or silence feature temporarily silences the alarm and can be activated by pressing the test button for approximately 1 second. When hush or silence feature is activated, the alarm will enter dormant mode for 10-minute period with reduced sensitivity. Reduced sensitivity is indicated by red LED flashing every 10 seconds. After the period is over, the device will signal returning to normal sensitivity with two short beeps. If smoke density increases during hush or silence period, the device will automatically return to alarm mode.

Smoke alarms should be replaced at minimum every 5 years.

© 2025 Axopar Boats

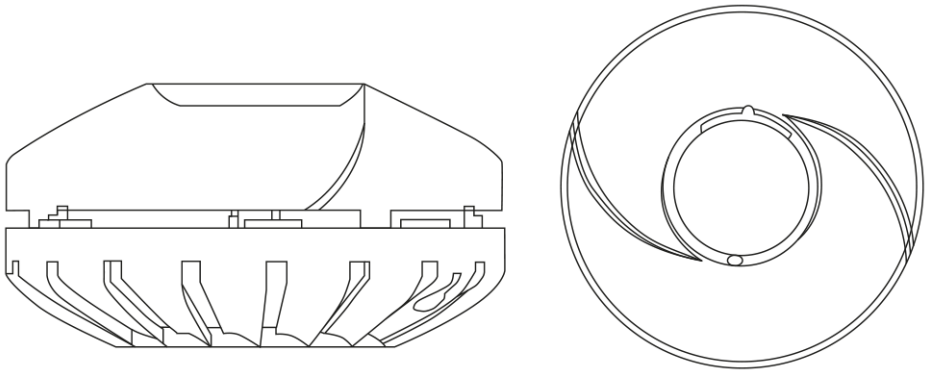

Figure 2.1 Smoke alarm

2.7 Life raft

The boat is not equipped with a life raft by the manufacturer.

Storing a life raft

If you decide to acquire a life raft for your boat, stow it to the aft of the boat, so that it is easily accessible in case of emergency.

Using the life raft

The life raft must be tied to the stern of the boat and prepared for use.

In an emergency, it is easiest and safest to board the life raft from the swimming deck. Switch off the engine before using the life raft.

Follow the life raft manufacturer’s instructions.

2.8 Safety labels on board

The following picture and table present the location and description of the safety labels on board.

© 2025 Axopar Boats

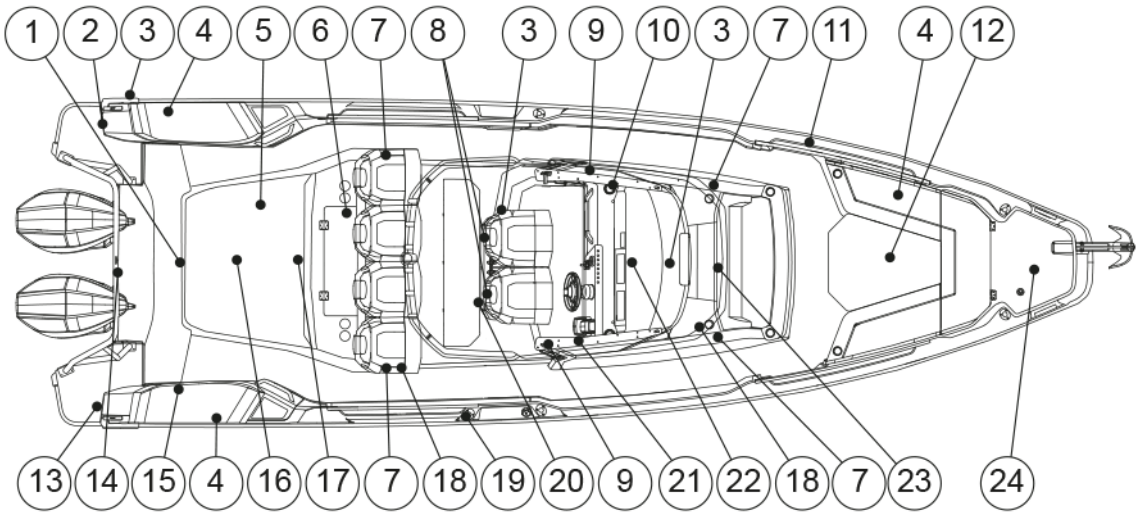

Position	Label	Description
1		**Danger** Aft deck folding seats should not be used when vessel speeds in excess of 5 m.p.h.
2		**Danger** Contact with a spinning propeller will cause serious injury or death. Stay clear of boat and stay off swim plaform and boarding ladder while engine is running.
2	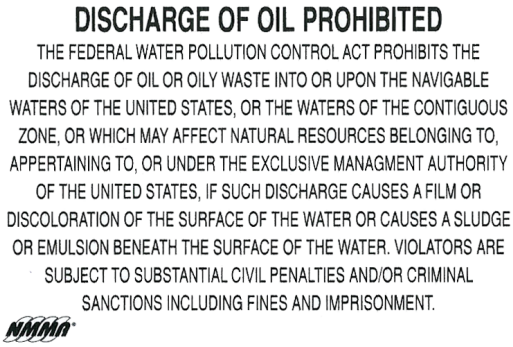	**Discharge of oil prohibited** The federal water pollution control act prohibits the discharge of oilor oily waste into or upon the navigable waters of the United States, or the waters of the contiguous zone, or which may affect natural resources belonging to, appertaining to, or under the exclusive management authority of the Unites States, if such discharge causes a film or discoloration of the surfaces of the water or causes a sludge or emulsion beneath the surface of the water. Violators are subject to substantial civil penalties and/or criminal sanctions including fines and imprisonment.
3		Do not drink water

© 2025 Axopar Boats

Position	Label	Description
4		**Warning** No ventilation is provided. Fuel vapors are a fire and explosion hazard. To avoid injury or death, do not store fuel or flammable liquids here. (Ventilation warning to bow locker and to both aft fender boxes.)
5		**Caution** If switch is turned off while engine is running alternator will be damaged.
6		Do not drink water
6		**Warning** Do not close the wetbar lid until the grill has completely cooled down.
6	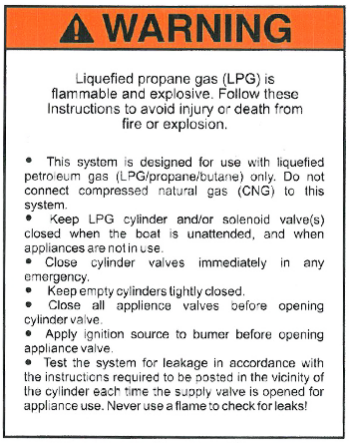	**Warning** Liquefied propane gas (LPG) is flammable and explosive. Follow these instructions to avoid injury or death from fire or explosion. • The system is designed for use with liquefied petroleum gas (LPG/propane/butane) only. Do not connect compressed natural gas (CNG) to this system. • Keep LPG cylinder and/or solenoid valve(s) closed when the boat is unattended, and when appliances are not in use. • Close cylinder valves immediately in any emergency. • Keep empty cylinders tightly closed. • Close all appliance valves before opening cylinder valve. • Apply ignition source to burner before opening appliance valve. • Test the system for leakage in accordance with the instructions required to be posted in the vicinity of the cylinder each time the supply valve is opened for appliance use. Never use a flame to check for leaks.

© 2025 Axopar Boats

Position	Label	Description
7	WARNING WATERTIGHT CLOSURE KEEP SHUT WHEN UNDER WAY	**Warning** Watertight closure keep shut when under way.
8	⚠ WARNING AVOID SERIOUS INJURY OR DEATH. UNEXPECTED SEAT ROTATION MAY CAUSE EJECTION OF OCCUPANT. LOCK SWIVEL WHEN SPEED EXCEEDS 5 MPH.	**Warning** Avoid serious injury or death. Unexpected seat rotation may cause ejection of occupant. Lock swivel when speed exceeds 5 mph.
9	⚠ WARNING RUNNING BOAT WITH DOOR OPEN COULD INDUCE EXHAUST FUMES INTO CABIN. SEE OWNERS MANUAL FOR INSTRUCTIONS CONCERNING CARBON MONOXIDE.	**Warning** Running boat with door open could induce exhaust fumes into cabin. See owners manual for instructions concerning carbon monoxide.
9	⚠ WARNING KEEP SHUT WHILE UNDERWAY. RUNNING BOAT WITH DOOR OPEN COULD INDUCE EXHAUST FUMES INTO CABIN. SEE OWNER'S MANUAL FOR INSTRUCTIONS CONCERNING CARBON MONNXIDE.	**Warning** Keep shut while under way. Running boat with door open could induce exhaust fumes into cabin. See owner's manual for instructions concerning carbon monoxide.
10	BOATMAN'S CHECK LIST For maximum enjoyment and safety, check each of these items BEFORE you start your engine: ✔ DRAIN PLUG (Securely in place?) ✔ LIFE-SAVING DEVICES (One for every person on board?) ✔ STEERING SYSTEM (Working smoothy and properly?) ✔ FUEL SYSTEM (Adequate fuel? Leaks? Fumes?) ✔ BATTERY (Fully charged? Cable terminals clean and tight?) ✔ ENGINE (In neutral?) ✔ CAPACITY PLATE (Are you overloaded or overpowered?) ✔ WEATHER CONDITIONS (Safe to go out?) ✔ ELECTRICAL EQUIPMENT (Lights, horn, pump, etc.?) ✔ EMERGENCY GEAR (Fire extinguisher, bailer, paddle, anchor & line, signaling device, tool kit, etc.?) NMMA © NMMA 1981	**Boatman's checklist** For maximum enjoyment and safety, check each of these items before you start your engine: - Drain plug (Securely in place?) - Life-saving devices (One for every person on board?) - Steering system (Working smoothly and properly?) - Fuel system (Adequate fuel? Leaks? Fumes?) - Battery (Fully charged? Cable terminals clean and tight?) - Engine (In neutral?) - Capacity plate (Are you overloaded or overpowered?) - Electrical equipment (Lights, horn, pump, etc?) - Emergency gear (Fire extinguisher, bailer, paddle, anchor & line, signaling device, tool kit, etc.?)
10	⚠ CAUTION IF SWITCH IS TURNED OFF WHILE ENGINE IS RUNNING ALTERNATOR WILL BE DAMAGED.	**Caution** If switch is turned off while engine is running alternator will be damaged.

© 2025 Axopar Boats

Position	Label	Description
11		**Warning** Avoid personal injury. Stay inside deck rails (and gates) when boat is underway.
12		**Warning** Installation of Maintenance free AGM Batteries are only allowed in this area.
13		**Danger** Contact with a spinning propeller will cause serious injury or death. Stay clear of boat and stay off swim plaform and boarding ladder while engine is running.
13	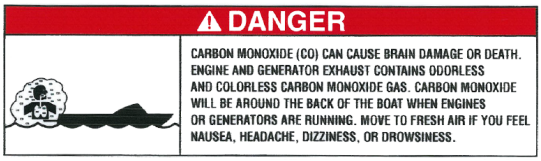	**Danger** Carbon monoxide (CO) can cause brain damage or death. Engine and generator exhaust contains odorless and colorless carbon monoxide gas. Carbon monoxide will be around the back of the boat when engines or generators are running. Move to fresh air if you feel nausea, headache, dizziness, or drowsiness.
14	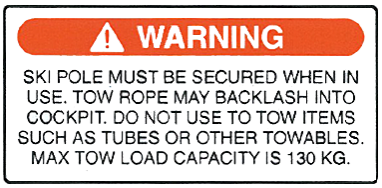	**Warning** Ski pole must be secured when in use. Tow rope may backlash into cockpit. Do not use to tow items such as tubes or other towables. Max tow load capacity is 130 kg.
15		Fire extinguisher
16		Emergency exit

© 2025 Axopar Boats

Position	Label	Description
16	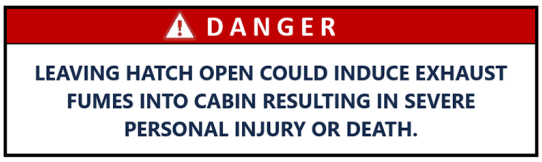	**Danger** Leaving hatch open could induce exhaust fumes into cabin resulting in severe personal injury or death.
16		Warning No ventilation is provided. Fuel vapors are a fire and explosion hazard. To avoid injury or death, do not store fuel or flammable liquids here.
16		**Warning** Watertight closure keep shut when under way.
17		**Danger** Aft sun pad should not be used when vessel is under way.
18	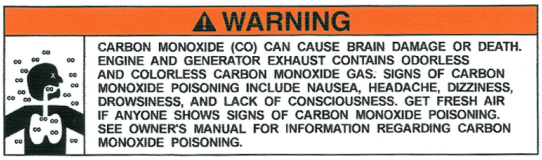	**Warning** Carbon monoxide (CO) can cause brain damage or death. Engine and generator exhaust contains odorless and colorless carbon monoxide gas. Signs of carbon monoxide poisoning include nausea, headache, dizziness, drowsiness, and lack of consciousness. Get frensh air if anyone shows signs of carbon monoxide poisoning. See owner's manual for information regarding carbon monoxide poisoning.
19	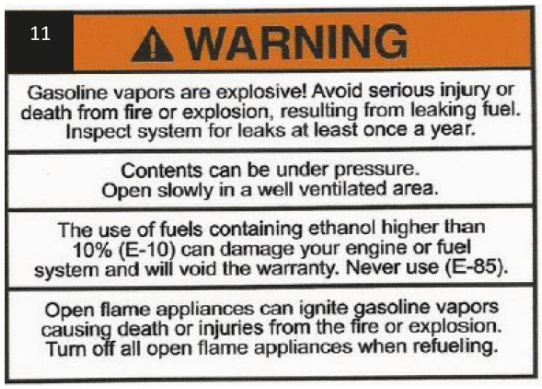	**Warning** Gasoline vapors are explosive! Avoid serious injury or death from fire or explosion, resulting from leaking fuel. Inspect system for leaks at least once a year. Contents can be under pressure. Open slowly in a well ventilated aread. The use of fuels containing ethanol higher than 10% (E-10) can damage your engine or fuel system and will void the warranty. Never use (E-85). Open flame appliances can ignite gasoline vapors causing death or injuries from the fire or explosion. Turn off all open flame appliances when refueling.

© 2025 Axopar Boats

Position	Label	Description
19		Canada version. **Warning** Gasoline vapours may cause fires or explosions. Do not overfill fuel tank.. Keep the craft away from open flames and sparks. Do not start craft if liquid gasoline or vapours are present. Always replace engine cover (or seat) before starting. **Warning** Avoid serious injury or death from fire or explosion resulting from leaking fuel. Inspect system for leaks frequently.
20	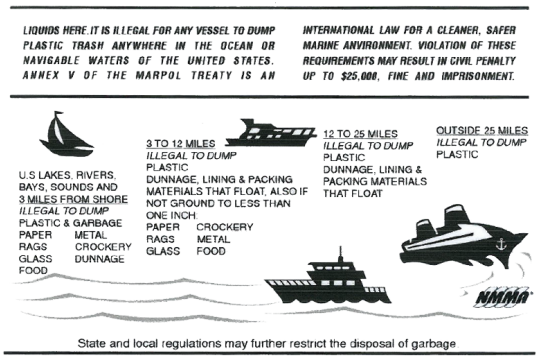	Liquids here. It is illegal for any vessel to dump plastic trash anywhere in the ocean or navigable waters of the United States. Annex V of the Marpol Treaty is an international law for a cleaner, safer marine environment., Violation of these requirements may result in civil penalty up to $25,000, fine and imprisonment. U.S. lakes, rivers, bays, sounds and 3 miles from shore Illegal to dump plastic & garbage, paper, metal, rags, crockery, glass, dunnage, food. 3 to 12 miles Illegal to dump plastic, dunnage, lining & packing materials that float. Also if not ground to less than one inch: paper, crockery, rags, metal, glass, food 12 to 25 miles illegal to dump plastic, dunnage, lining & packing materials that float Outside 25 miles illega do dump plastic State and local regulations may further restrict the disposal of garbage.
21	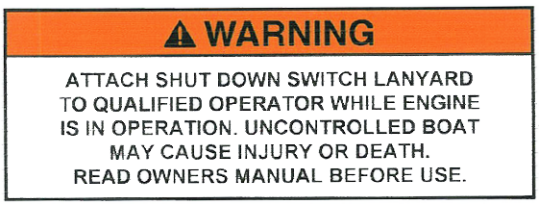	**Warning** Attach shut down switch lanyard to qualified operator while engine is in operation. Uncontrolled boat may cause injury or death. Read owners manual before use.

© 2025 Axopar Boats

Position	Label	Description
21	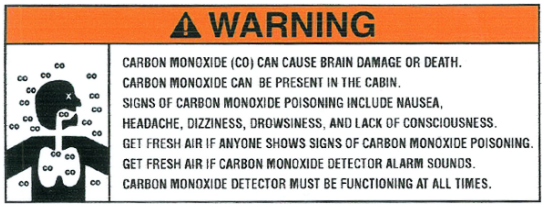	**Warning** Carbon monoxide (CO) can cause brain damage or death. Carbon monoxide can be present in the cabin. Signs of carbon monoxide poisoning include nausea, headache, dizziness, drowsiness, and lack of consciousness. Get frensh air if anyone shows signs of carbon monoxide poisoning. Get fresh air if carbon monoxide detector alarm sounds. Carbon monoxide detector must be functioning at all times.
21		**Danger** • Contact with a spinning propeller will cause serious injury or death. • Shut off engines while people are in the water near the boat, on the swim platform, or on the boarding ladder. • Never operate in reverse towards a person in the water.
21	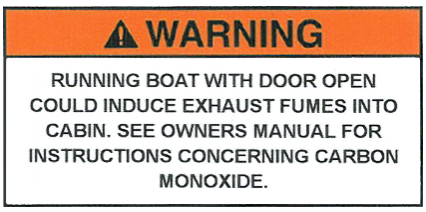	**Warning** Running boat with door open could induce exhaust fumes into cabin. See owners manual for instructions concerning carbon monoxide.
21		**Warning** Qualified operator to be in control at all times. Operation by an unqualified operator can cause loss of control. This may result in severe injury, death, or property damage. Boat stability and handling will change with weight disctribution. Read owners manual before use.
21		**Warning** Use caution with skier in tow as tow rope may backlash into cockpit when released.
21	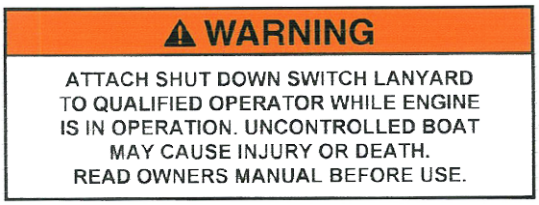	**Warning** Attach shut down switch lanyard to qualified operator while engine is in operation. Uncontrolled boat may cause injury or death. Read owners manual before use.

© 2025 Axopar Boats

Position	Label	Description
22	WARNING WATERTIGHT CLOSURE KEEP SHUT WHEN UNDER WAY	**Warning** Watertight closure keep shut when under way.
23		Shutoff valve
24		Pay attention to the warnings and read the manual.
24		**Warning** Keep hands out of machinery. Follow up instructions for remote control enabling.
24		Warning No ventilation is provided. Fuel vapors are a fire and explosion hazard. To avoid injury or death, do not store fuel or flammable liquids here.
24		**Warning** Electrical shock and fire hazard. Failure to follow these instructions may result in injury or death. (1) Turn off the boat's shore power connection switch before connecting or disconnecting the shore power cable. (2) Connect shore power cable at the boat first. (3) If polarity-warning indicator is activated, immediately disconnect cable. (4) Disconnect shore power cable at shore outlet first. (5) Close shore power inlet cover tightly. **Do not alter shore power cable connectors**

© 2025 Axopar Boats

Position	Label	Description
24	**WARNING** **ELECTRICAL SHOCK AND FIRE HAZARD. FAILURE TO FOLLOW THESE INSTRUCTIONS MAY RESULT IN INJURY OR DEATH.** (1) Turn off the boat's shore power connection switch before connecting or disconnecting the shore power cable. (2) Connect shore power cable at the boat first. (3) If polarity-warning indicator is activated, immediately disconnect cable. (4) Disconnect shore power cable at shore outlet first. (5) Close shore power inlet cover tightly. **DO NOT ALTER SHORE POWER CABLE CONNECTORS** **MISE EN GARDE** **RISQUE DE CHOC ELECTRIQUE ET D'INCENDIE. LE NON RESPECT DE CES INSTRUCTIONS PEUT CAUSE DES BLESSURES SERIEUSES OU LA MORT.** (1) Fermer l'interrupteur de l'alimentation à terre avant de raccorder ou de débrancher le cable d'alimenation. (2) Raccorder d'abord le cable d'alimentation à terre au navire. (3) Si l'indicateur de polarité est activé, débrancher immédiatement le cable d'alimentation. (4) Débrancher d'abord le cable d'alimentation à terre de la borne du quai. (5) Fermer hermétiquement le couvercle du cable d'alimentation à terre. **NO PAS MODIFIER LE CABLE D'ALIMENTATION À LA TERRE**	**Warning** Shore power Canada version.
24	**NOTICE** **LPG WORKING PRESSURE** **BUTANE: 28mbar** **PROPANE: 37mbar**	**Notice** LPG working pressure Butane: 28mbar Propane: 37mbar
24	**LPG SHUTOFF VALVE**	LPG shutoff valve
24	**NOTICE** **LPG LEAK TEST PROCEDURE** **1. WITH THE APPLIANCE VALVES CLOSED, OPEN THE CYLINDER VALVE.** **2. CLOSE THE CYLINDER VALVE, ALLOW GAUGE PRESSURE TO STABILIZE.** **3. OBSERVE GAUGE PRESSURE FOR 3 MIN.** **4. IF PRESSURE IS CONSTANT, NO LEAK IS PRESENT. IF PRESSURE FAILS, ALEAK EXISTS DO NOT USE LPG UNTIL LEAK IS REPAIRED.**	**Notice** LPG leak test procedure **1.**With the appliance valves closed, open the cylinder valve. **2.**Close the cylinder valve, allow gauge pressure to stabilize. **3.**Observe gauge pressure for 3 min. **4.**If pressure is constant, no leak is present. If pressure fails, a leak exists. Do not use LPG until leak is repaired.

© 2025 Axopar Boats

Position	Label	Description
24		**Warning** Open flame appliances can ignite gasoline vapors causing death or injuries from fire or explosion. Turn off all open flame appliances when refueling.
24	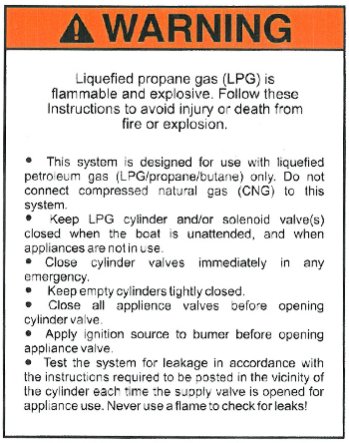	**Warning** Liquefied propane gas (LPG) is flammable and explosive. Follow these instructions to avoid injury or death from fire or explosion. • The system is designed for use with liquefied petroleum gas (LPG/propane/butane) only. Do not connect compressed natural gas (CNG) to this system. • Keep LPG cylinder and/or solenoid valve(s) closed when the boat is unattended, and when appliances are not in use. • Close cylinder valves immediately in any emergency. • Keep empty cylinders tightly closed. • Close all appliance valves before opening cylinder valve. • Apply ignition source to burner before opening appliance valve. • Test the system for leakage in accordance with the instructions required to be posted in the vicinity of the cylinder each time the supply valve is opened for appliance use. Never use a flame to check for leaks.

© 2025 Axopar Boats

3 Product overview

3.1 Purpose of use

The boat is a recreational boat, thus not suitable for professional use.

3.2 Identification

Each boat has a unique identification code, containing 14 characters and a hyphen.

The height of the code text is 6 mm, and it is located on the starboard side of the stern.

Example: FI – AXO9D010H525	**Data**
FI	Country of manufacturer: Finland
-	Hyphen
AXO	Manufacturer: Axopar Boats
9D	Boat model • D = CCX
010	Boat number
H	Manufacturing month • A = January • B = February • C = March • etc.
5	Last digit of the manufacturing year
25	Model year

© 2025 Axopar Boats

3.3 Builder's plate

The builder’s plate is always located close to the steering position of the boat.

Boat has been inspected according to Recreational Craft Directive and related standards’ requirements. HPi Verification Services Ltd. has assigned EU Type-Examination Certificate (CE certificate) to the boat model.

Boat carries UKCA marking (shown in right bottom corner of CE plate) to indicate that it complies with the UK Recreational Craft Regulations.

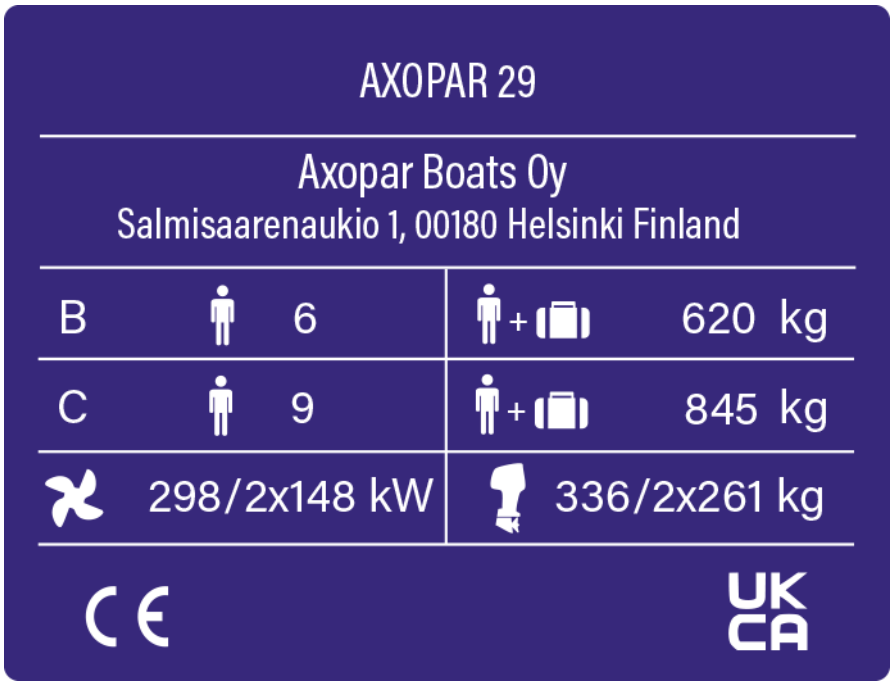

New builder's plate is in effect from the beginning of model year 2026.

© 2025 Axopar Boats

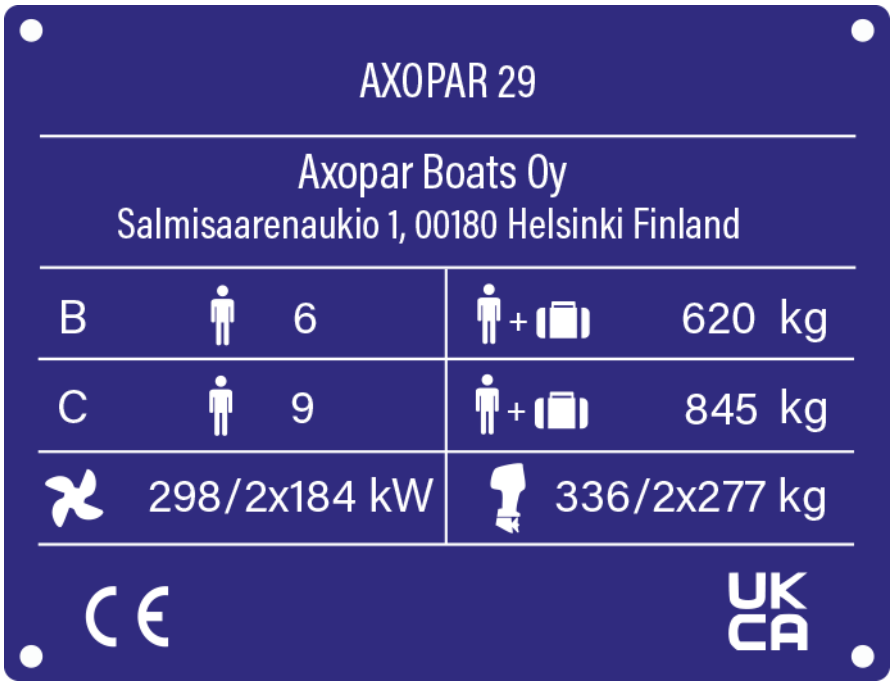

The builder's plate contains the following information:

- Boat model
- Manufacturer's address
- Maximum number of persons on board
- Maximum load: total weight of persons including personal luggage and basic equipment, and excluding tank contents

3.4 CE certification

This boat is classified to CE categories B and C.

The category is determined according to the maximum number of persons allowed onboard.

The CE certification indicates that a boat is designed and built in such a way that it retains its stability and buoyancy in given circumstances and meets other important requirements that are characteristic of the category in question. One of these requirements is that the boat must be easy to maneuver.

The CE categories classification also signifies that a boat is designed and constructed to withstand the following parameters in respect of stability, buoyancy, and other relevant essential requirements stated.

Category	Description
B. Offshore	The boat is designed for offshore voyages, where conditions up to and including wind force 8 on Beaufort Scale and significant wave heights up to and including 4 meters may be experienced.
C. Inshore	The boat is designed for voyages in coastal waters, large bays, estuaries, lakes and rivers, where conditions up to and including wind force 6 Beaufort Scale and significant wave heights up to and including 2 m may be experienced.

© 2025 Axopar Boats

3.5 Dimensions and weight

Dimensions

Dimension	SI units	US units
Hull length (LH)	9.31 m	30 ft 7 in
Overall length (LMAX) (excluding engine)	9.71 m	31 ft 10 in
Hull beam (BH)	2.92 m	9 ft 7 in
BMAX	3.0 m	9 ft 10 in
Draught at max. load (excluding engine)	0.62 m	2 ft
Draught to props	approx 0.93 m	3 ft 6 in
Height measured from waterline at light load (Antennas and light down)	2.6 m	8 ft 6 in

Engines

	SI units	US units
Maximum recommended engine power	298 kW	400 hp
Maximum recommended power with twin engines	2 x 148 kW	2 x 200 hp
• From beginning of model year 2026, maximum recommended engine power with twin engines was updated to	2 x 184 kW	2 x 250 hp
Maximum recommended engine weight, single engine	336 kg	741 lb
Maximum recommended engine weight, twin engine	2 x 261 kg	2 x 575 lb
• From beginning of model year 2026, maximum recommended engine weight, twin engine was updated to	2 x 277 kg	2 x 611 lb

© 2025 Axopar Boats

Weight and loading

	Category B		Category C	
	SI units	**US units**	**SI units**	**US units**
Hull weight (excluding engines)	2700 kg	5952 lb	2700 kg	5952 lb
Weight of unloaded boat with maximum weight outboard engines (MLC)	3332 kg	7346 lb	3332 kg	7346 lb
Boat weight at maximum load (MLDC)	4662 kg	10 278 lb	4936 kg	10 882 lb
Mass on trailer (excluding weigth of septic and bait tanks contents)	3840 kg	8466 lb	3840 kg	8466 lb

	Cateory B	Category C
Maximum number of persons Default weights • Adult: 75 kg • Child: 37.5 kg	6	9

Load components

	Category B		Category C	
	SI units	**US units**	**SI units**	**US units**
Maximum recommended load	1330 kg	2932 lb	1605 kg	3538 lb

of which

	Category B		Category C	
	SI units	**US units**	**SI units**	**US units**
Total weight of all persons	450 kg	992 lb	675 kg	1488 lb
Personal luggage	80 kg	176 lb	80 kg	176 lb
Life raft weight	50 kg	110 lb	50 kg	110 lb

© 2025 Axopar Boats

	Category B		Category C	
	SI units	**US units**	**SI units**	**US units**
Optional - Load on roof racks	40 kg	88 lb	40 kg	88 lb
Total weight of fuel, water and other liquids	759 kg	1673 lb	759 kg	1673 lb

Tank capacity

	SI units	US units
Fuel tank	600 l	158.5 gal
Optional items		
Fresh water tank	42 l	11 gal
Septic tank	42 l	11 gal
Fish box	42 l	11 gal
Main baitwell with tackle station	120 l	32 gal
Fender box livewell	95 l	25 gal

The boat's stability assessment is based on maximum load conditions.

The maximum recommended load only contains the weight components mentioned above.

Boat weight may vary ±15% depending on the options chosen.

3.6 Boat layout

The boat has several deck options. The layout of the equipment and the technical components may vary depending on the chosen accessories.

The standard boat has a flat aft deck with stowage underneath.

The stowage can be replaced with optional extra equipment such as an aft cabin, a storage bench, a wet bar or U-sofa.

© 2025 Axopar Boats

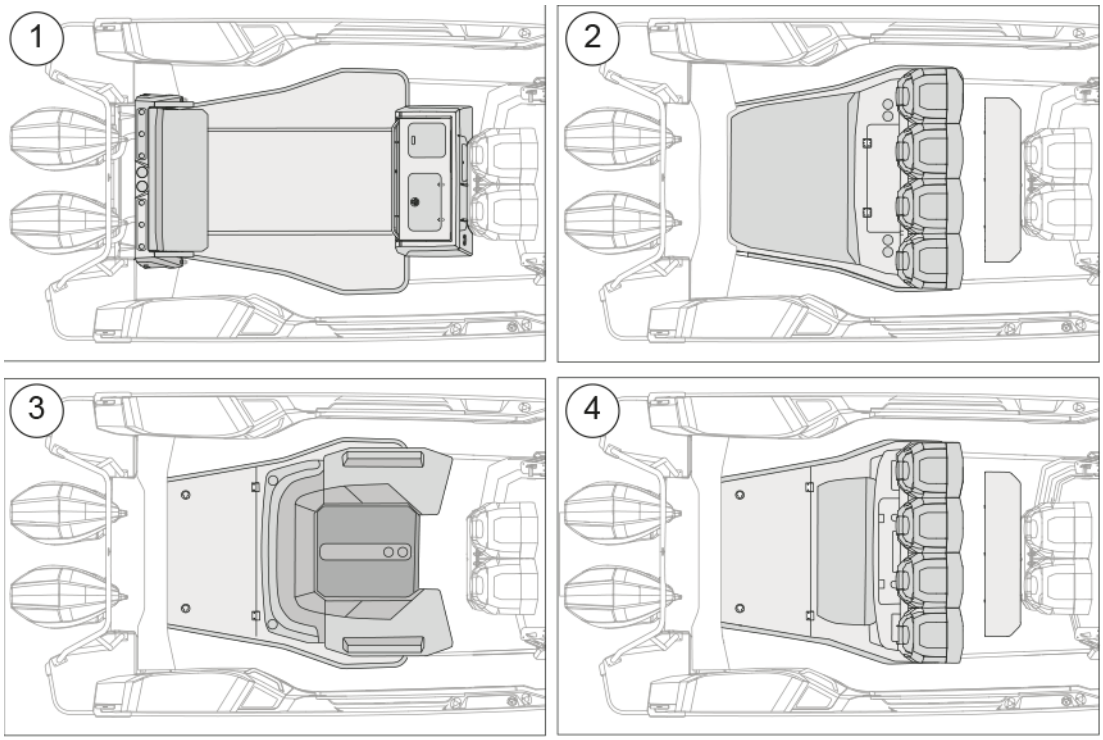

(1) Foldable aft leaning post / Main baitwell with tackle station
(2) Aft cabin / multi-storage
(3) Aft U-sofa
(4) Wet bar

As an option, the cockpit can be equipped with seat base refrigerator and sink. In the front part of the cockpit, there is a separate multicabin with a door that opens to the front deck. The multicabin can be equipped with a toilet package and furnished with an accommodation package.

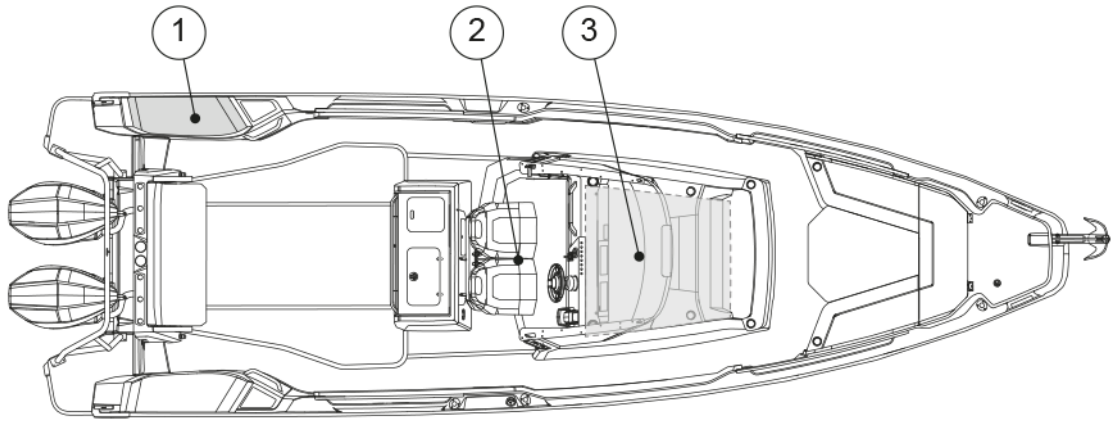

(1) Optional fender box wet bar
(2) Optional seatbase refrigerator and sink
(3) Multicabin or optional toilet

© 2025 Axopar Boats

4 Product description

4.1 Stability and buoyancy

Pay attention to the stability and buoyancy of the boat.

All weight dispositions (for example installing a fishing tower or radar, and engine replacement) can have a significant impact on the stability, trim, and performance of the boat.

- The bilge water level needs to be kept at a minimum.
- The stability of the boat is compromised if any weight is placed in a high position.

In stormy weather, all hatches, compartments and doors must be kept closed to minimize the risk of flooding.

Breaking waves represent a significant danger to stability.

⚠ WARNING To avoid the risk of flooding, always keep the seacocks closed when not in use (for example, the seacock for the toilet's flushing water).

4.1.1 Self-draining systems

The boat is equipped with self-draining systems for the whole deck area. The system is drained through drain holes in the aft of the boat. In addition to rainwater, the drain holes are intended to drain water ending up on the deck through splashing or from breaking waves.

There are drain holes for water in both aft corners of the deck. The openings are directly connected to the sea. The deck of the boat has been designed to allow the water to drain straight into the sea via the water gullies.

⚠ CAUTION Do not block the drain holes when using the boat.

© 2025 Axopar Boats

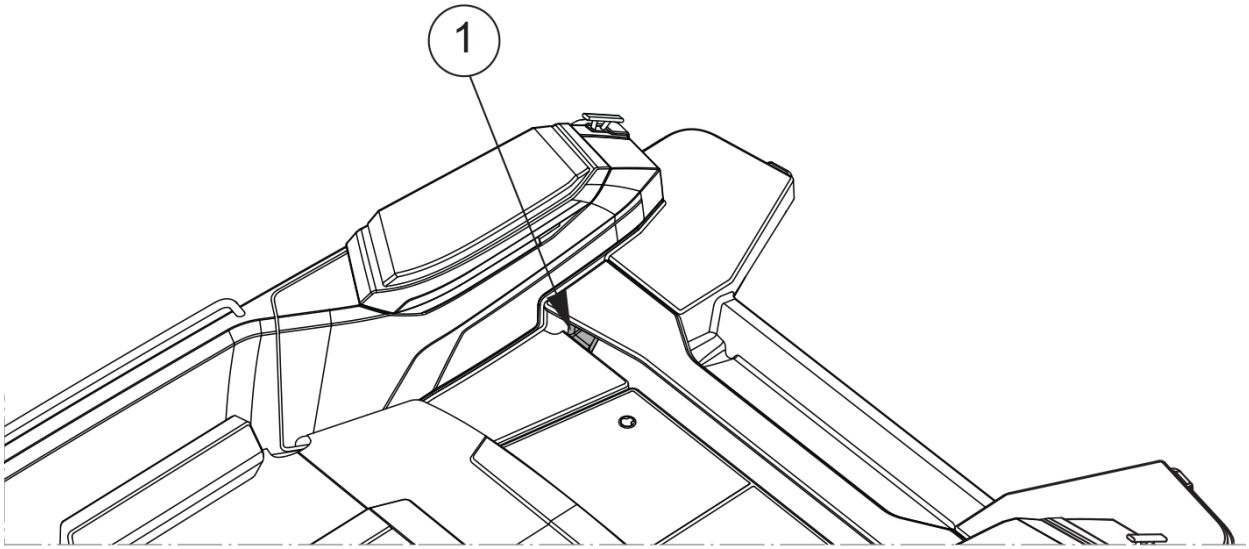

(1) Drain hole

The drain holes must be open at all times. Clean the holes regularly by removing any accumulated debris to prevent clogging.

The system is built so as to drain the water from the deck in normal use. Do not close the taps when using the boat or when the boat is attached to the dock.

In the drivers floor, there is drain hole at port side of the floor. Behind the drain hole, automatic water pump is installed. It removes water from driver's floor. Keep drain holes clean.

NOTICE

The self-emptying open space is meant for the removal of such water that ends up on the deck through rain, splashing or from breaking waves. A part of the rain water as well as water condensation in the bilge may end up in the bilge.

- Do not leave the boat unattended in the water for a long time.
- Observe the floating position of the boat and empty the bilge when necessary.

Leaving the boat unattended in the water for a long time may cause damage.

Footwell area at the drivers location is drained with a bilge pump. The pump is located at the port side of the well area, behind a panel. Do not block the drain hole.

4.1.2 Openings in the hull and deck

There are several inlets through the boat that include valves for opening and closing such inlets. It is recommended to keep these inlets closed if the boat is out of use for a long time, and to open them again when the boat is used again. If the boat is lifted out from water or in rainy conditions, inlets should be kept open.

Always check that all hatches are securely closed before and after using the boat.

Always check in the spring when launching that the inlets through the side and bottom are tightly closed.

© 2025 Axopar Boats

We recommend that you keep the windows, doors, deck hatches, roof hatches, vents and interior doors closed while driving. In stormy weather, always keep them securely closed to minimize the risk of water getting into the boat and to avoid any personal injuries.

In certain conditions and speeds, it is possible that water is sprayed inside through canopies, hatches or other openings, due to negative pressure or other effects. Risk for this can be minimized by closing the canopies, hatches or other openings.

⚠ WARNING All doors and hatches must be kept shut when under way.

The figure shows the hatches and seacocks that must be kept closed when the boat is left unmanned. Keep hatches closed also while underway.

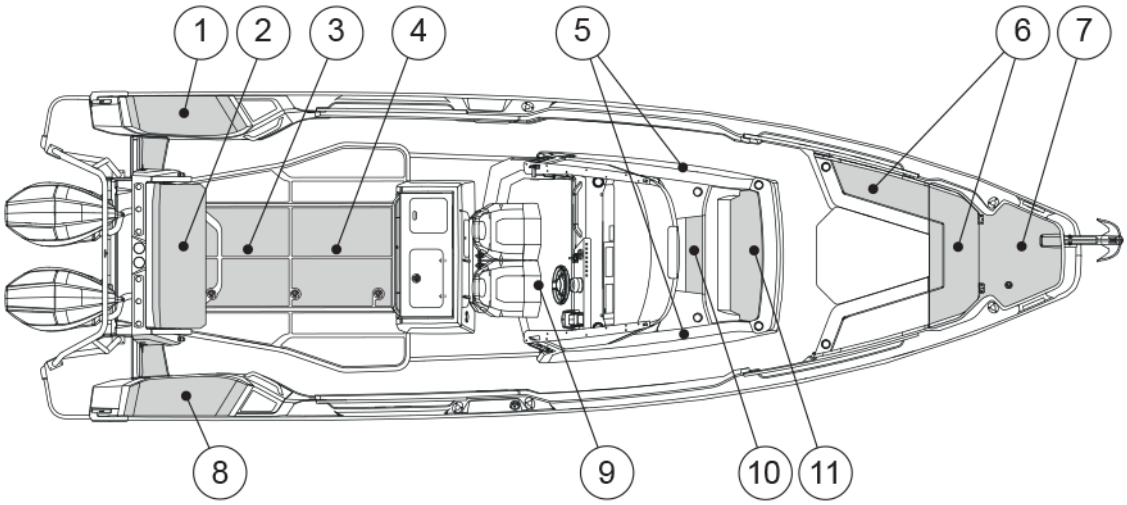

(1) Port fender box hatch / livewell (optional)
(2) Foldable seat
(3) Aft deck hatch / aft cabin hatch
(4) Optional raw water system (sea chest) seacock
(5) Front cabin portlights
(6) Storage box hatches
(7) Anchor hatch
(8) Starboard fender box hatch
(9) Fuel tank compartment inspection hatch
(10) Multicabin hatch
(11) Black water tank seacock and raw water intake seacock

The location and number of these components depend on the level of the equipment on the boat.

© 2025 Axopar Boats

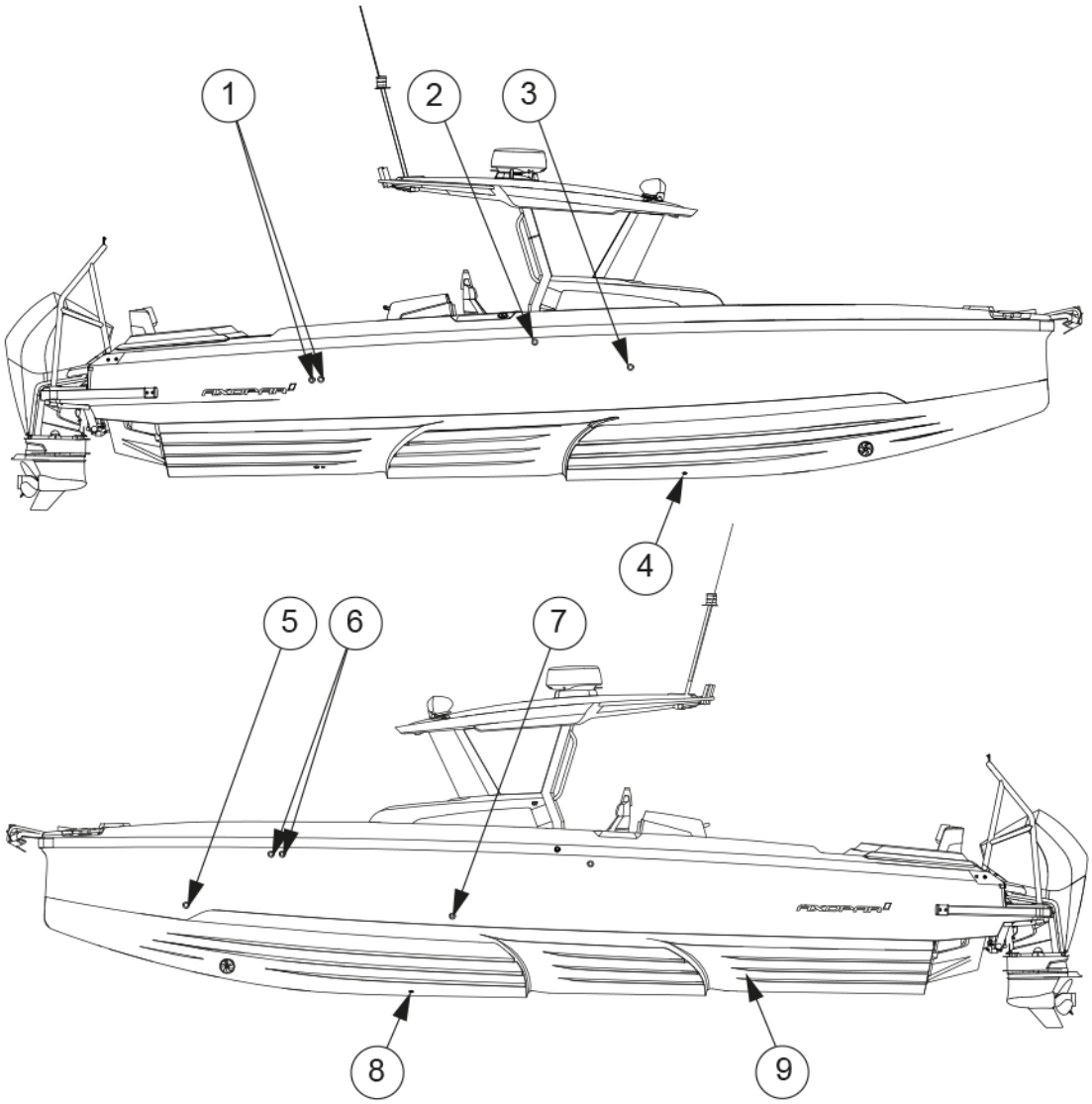

(1) Electric and manual bilge pump outlets
(2) Fuel tank ventilation
(3) Grey water outlet
(4) Black water outlet and raw water intake
(5) Manual front bilge pump outlet
(6) Fresh water and black water tank vents
(7) Electric front bilge pump outlet
(8) Transducer
(9) Raw water system / Livewell seacock

4.1.3 Bilge system

The bilge system is designed to enable keeping the bilge water level at a minimum. The system consists of several pumps that cover all the lower sections of the boat.

© 2025 Axopar Boats

The boat is equipped with both manual and electric bilge pumps. The signs on the boat display the draining area of each pump.

The manual bilge pump is controlled with its handle.

The submersible electric bilge pumps are equipped with a float which triggers them automatically if there is water in the bilge space. The electric bilge pumps can also be controlled manually from the switches on the steering console.

⚠ WARNING

The bilge system is not designed for damage control.

The combined capacity of the bilge system is not designed to pump out the boat in the event of hull damage.

NOTICE

Keep the bilge area clean by washing it ever so often using bilge cleaner or biodegradable soap and water. Clean bilge significantly helps noticing signs of leaks or other problems that may occur.

NOTICE

- Check the functionality of the bilge pumps regularly by manually activating them.
- Remove any waste from the intakes.
- Clear the pump outlets from debris.

NOTICE

Do not run the pumps dry for a long time. The pumps will be damaged.

NOTICE

Avoid pollution.

Since the bilge system comprises of several automatic and manual pumps that cover all areas of the boat, the risk of accidental discharge of contaminated water by automatic pumps needs to be minimized.

Mitigate the risk by checking the bilge water regularly for contaminants such as oil, diesel, and glycol.

Before every use

Make sure that:

- The bilge pumps can operate freely, and there are no objects blocking operation.
- Water can flow through the strainer, and there is no muck or material restricting the water flow.

  Clean the strainer by pushing the lock tabs in the pump motor and lifting the motor unit off.

© 2025 Axopar Boats

4.1.3.1 Bilge pumps

Bilge pump output

The manual and automatic bilge pump output exceeds the minimum of 15 liters (4 gallons) per minute.

Bilge pump locations

The manual bilge pump's control handle is located in the starboard side fender storage in the aft deck.

The electric bilge pumps are submersible.

One electric bilge pump is located under the berth of the aft cabin.

The second electric bilge pump can be accessed through the multicabin. The electric pumps are by default in automatic mode and pump out the bilge once the float-switch is triggered. The electric bilge pumps can also be started manually from the boat’s main control panel.

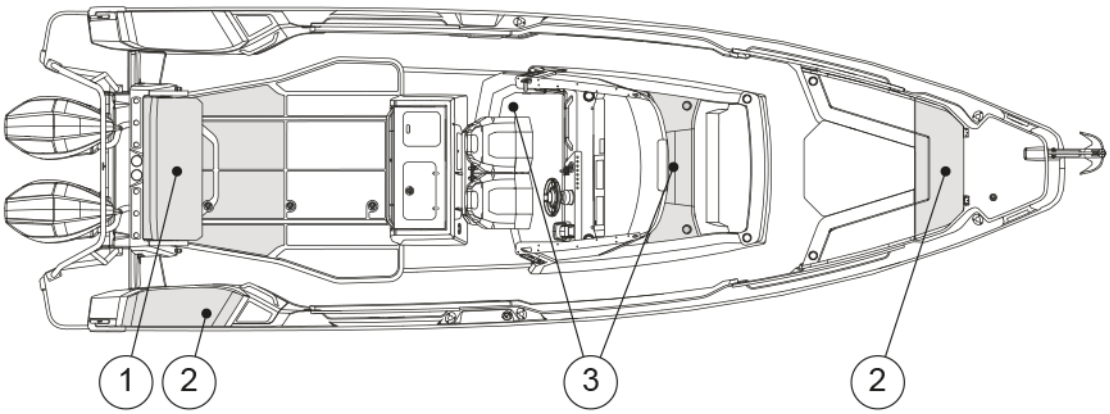

(1) Aft electric bilge pump
(2) Manual bilge pump
(3) Front electric bilge pump

4.2 Technical systems

4.2.1 Electrical system

⚠ WARNING

Risks of fire, explosion and electric shock!

Improper use of electric DC and AC systems may result in fire, explosion or electric shock.

Follow the instructions carefully.

© 2025 Axopar Boats

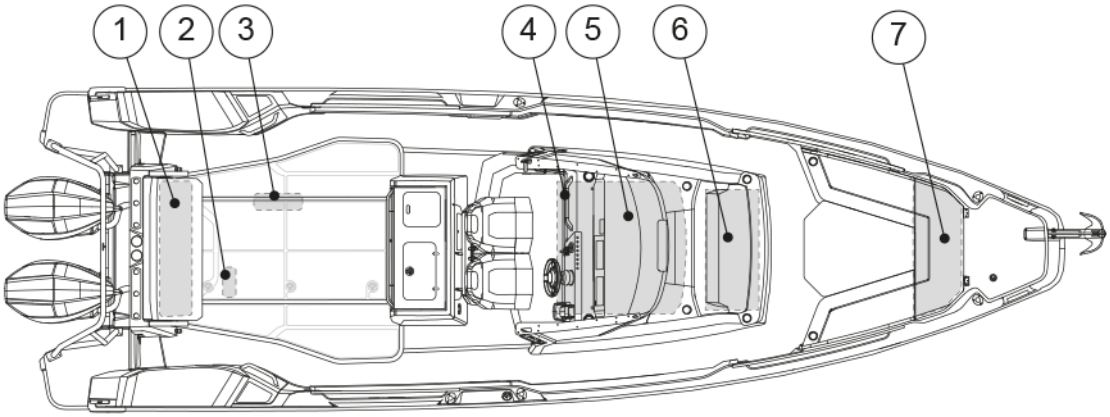

(1) Batteries
(2) Shore power system battery charger
(3) Main switch panel
(4) Optional remote main switch panel
(5) Fuse panel
(6) Bow thruster and windlass fuses; Aux battery with charger
(7) Shore power plug and fuse switches

4.2.2 12V system

Most of the boat's equipment uses the 12 V system.

The 12V system consists of engine driven alternators, batteries and equipment.The 12V system consists of battery chargers for shore-side electricity, batteries and equipment.The power is supplied to the batteries via diodes from either the engine alternator or the shore power charger.

To activate the circuits in the 12V system, the main switches for the corresponding circuits need to be activated and the fuses intact. When the electronic circuit is switched on, the equipment can be operated from the main switch panel.

⚠ WARNING

- Never switch off the main switch when the engine is running, because this may cause damage to the alternator.
- Never carry out electrical installations when the power is switched on.
- Never modify the boat’s electrical system or diagrams. Service and maintenance must be carried out by a qualified electrician.
- Never alter or modify the rated amperage of the overcurrent protective devices.
- Never install or replace electrical equipment with components that cause the circuit’s nominal rated amperage to be exceeded.
- Never leave the boat unattended with the electrical system energized, except automatic bilge pump, fire protection, and alarm circuits.
- Maintain any damaged equipment before taking it back to use.

© 2025 Axopar Boats

4.2.3 Main switches

The different electronic circuits of the boat are controlled by the main switches on the distribution board.

The main switches allow the batteries to be disconnected from all devices that consume electricity. When the main switches are in the On position, the current is conducted to the distribution board and from there to different parts of the boat.

The background color of the main switch and the text On shows that the electronic circuit is switched on, and when the circuit is switched off, the background color is red and the text says Off.

When you leave the boat for any length of time, switch off the current from all main switches. Devices that constantly need current are active regardless of the position of the main switches.

The design drawing of the boat's electrical system is presented in appendix ***Electrical diagrams***. The main switch is located under the aft seat. In the main switch panel, there are direct supply switches for critical equipment and main switches for the start batteries, the service battery and the Aux battery.

Current is fed to the engine by turning the Start switch to the On position. The current feed to other equipment is achieved by turning the Service switch to the On position, and feed to the bow thruster and windlasses is achieved by turning the Aux switch to the On position.

Main switch panel

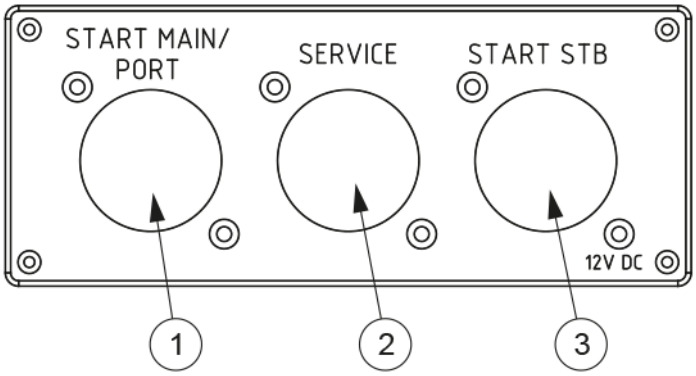

(1) Start batteries
(2) Service battery
(3) Optional second engine main switch

© 2025 Axopar Boats

Optional remote main switch panel

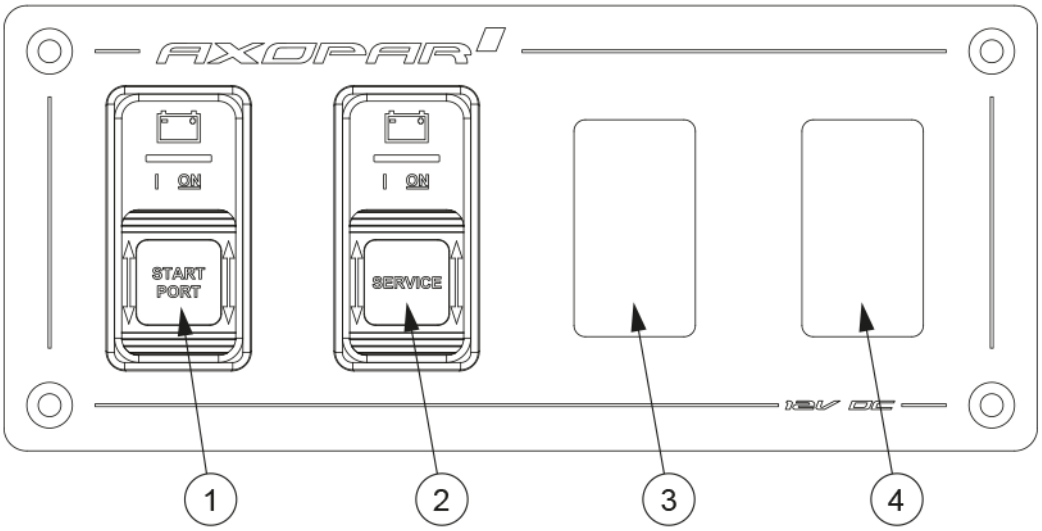

(1) Start batteries
(2) Service battery
(3) Space for the switch of optional second engine
(4) Space for the switch of optional bow thruster and windlass

4.2.4 Direct supply fuses

Some of the devices in the boat are supplied by direct supply switches. Direct supply switches are intended for such equipment that need current when the main switches are turned off.

When pushed down, the switch is on and when pushed up it is off. The switch indicates a short circuit or interference in the electronic circuit by springing up to the “off” position. The switch can be reconnected by pushing it back down to the “on” position. Do not reconnect the switch before you have found out the reason for the interference.

The direct supply switches must be left on even if the current from other circuits is switched off. An appliance that is switched off too early may cause the appliance to overheat and become damaged.

⚠ WARNING Turning the direct supply switch off too early may cause the device (for example, the heater) to break or catch fire, because the devices have a ventilation feature that works even if the device is otherwise switched off.

- Make sure the device is cooled down before turning it off completely. For more information, see the manual of the device in question.

4.2.5 Fuses

The fuse panel includes fuses for the boat’s equipment. The fuse panel is located in the front multicabin.

© 2025 Axopar Boats

The fuses are in the form of trip switches that break the circuit and spring up when tripped. Do not reset the switch before you have found out the reason for the breaker tripping. After that press the switch back down.

The panel has a switch for the macerator.

⚠ WARNING Before connecting an electric circuit, make sure that the circuit is not damaged and that there will be no short circuit or a fire caused by possible damages in the electric circuit. Any damaged equipment must be maintained or changed before they are again taken into use.

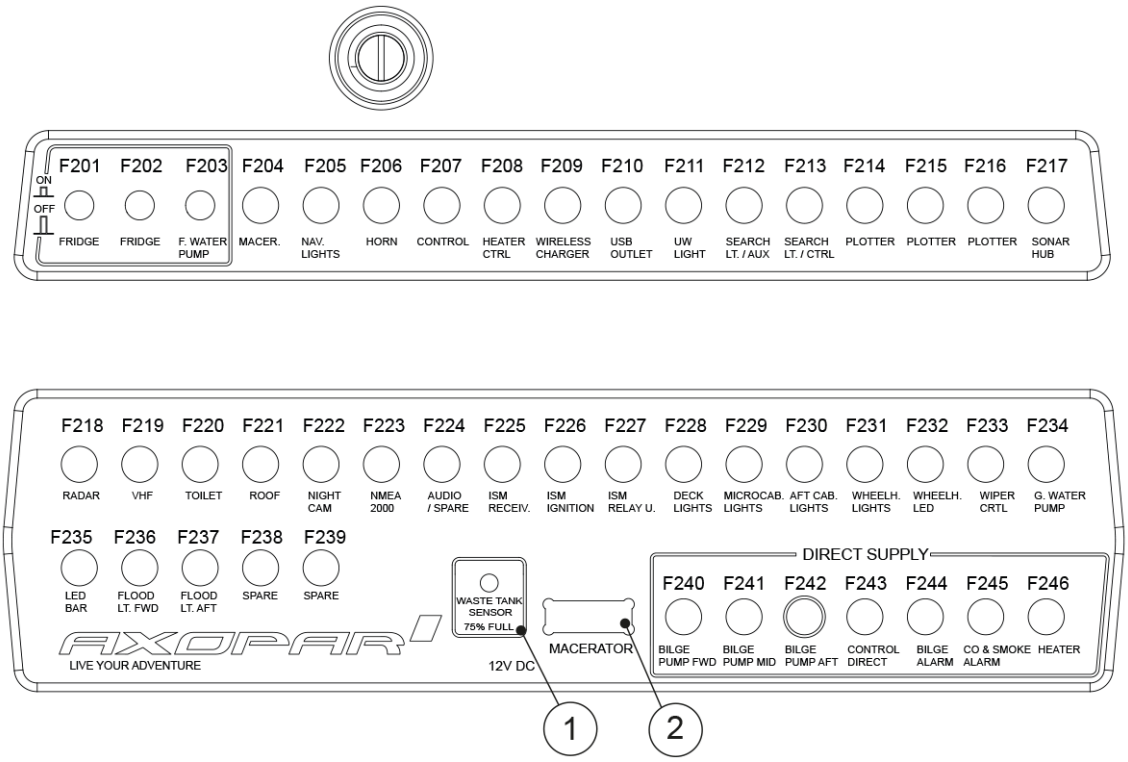

(1) Blackwater tank high-level alarm

(2) Macerator pump switch

4.2.6 Heavy duty fuses

The functioning of fuses can be checked from the holes in the fuse's cover. If the metal strip visible in the hole is unbroken, the fuse is operational.

If the metal strip is damaged, meaning that an overload has occurred, contact a qualified nautical electrician.

© 2025 Axopar Boats

⚠ WARNING

Opening the cover is not recommended, as there is a danger of electric shock and serious injury.

If the metal strip is damaged, contact a qualified nautical electrician. If it is necessary to open the cover, make sure that all the current cables from the batteries are disconnected.

4.2.7 Batteries

The standard boat is equipped with a start battery only, and a service battery is optional (dual battery system).

The start battery supplies current to the engine and engine-related equipment, and the service battery for other appliances and equipment on the boat.

The batteries are located in the aft of the boat. The exact location of the batteries is presented in the section ***Electrical System***.

⚠ WARNING

Only use maintenance-free AGM batteries in the boat.

- When you leave the boat, switch off the main switches unless the shore power cable is connected.
- Remove the batteries from the boat for winter storage.
  - When removing a battery, detach the negative pole first.
  - When disconnecting batteries, be careful not to touch both poles at the same time with a metal tool.

4.2.7.1 Charging the batteries

⚠ WARNING

- Remember that the batteries discharge an explosive oxy-hydrogen gas at a voltage of 14.4 volts.
  - The voltage of a normal battery in unloaded status is 12.3-12.7V.
  - During charging, the voltage increases and the charging regulator stops the charging process automatically at a preset level.
  - The voltage measurement must be taken at the battery terminals, not the alternator, to achieve the correct result.

4.2.7.2 Winter storage

For winter storage, the batteries can be left on board only if they are fully charged.

A partially discharged battery can freeze and crack. Always disconnect the cable terminals from the battery to avoid oxidation. When removing batteries, disconnect the negative pole first and make sure that there are no flammable or explosive materials or liquids nearby. When putting the batteries back in place, connect them in reverse order (positive pole first).

© 2025 Axopar Boats

4.2.7.3 Cleaning the batteries

The top of the batteries needs to be cleaned regularly to avoid current leakage between the cells. If the battery is located in a separate area, it is normally sufficient to clean it in the spring and autumn.

Make sure that the air holes in the cell plugs are open so that gas can be vented.

The terminals and cable terminals must be lubricated to prevent deposits and corrosion.

4.2.8 110/230V system

You can choose to equip your boat with the optional 110/230V AC system with a shore power connection, which will allow you to use devices that run on the standard mains current.

The system obtains its power from an external supply on shore or from the jetty (shore power). In the European market the system used is 230V and in the American market 110V.

The system functions when a shore power cable has been connected to the shore power socket connection.

1. Turn off the shore power switch before connecting or disconnecting the cable.
2. Connect the shore power cable to the boat before connecting it to the shore power.
3. Disconnect the shore power cable from the shore power before disconnecting from the boat.
4. Close the hatch of the boat's shore power connection.

⚠ CAUTION Unplug the shore power cable before starting the engines. Starting the engines with the shore power cable connected may break the battery isolators.

The system's main fuse is located in a separate control panel. The system includes a battery charger, which starts charging batteries automatically when the boat has been connected to shore power. The location of the components is presented in the section ***Electrical System***.

The shore power system needs to be checked at least biannually. Always disconnect the shore power cable when the system is not in use. Metal casings of installed electrical equipment must always be connected to earth in the boat electrical system. Use electrical equipment equipped with earth protection only.

⚠ DANGER Risk of electric shock and fire!

- Do not touch an energized high voltage system.
- Do not change the plug of the shore power cable. Use compatible connectors only.
- Try to minimize the risk of electric shock, short circuit and fire.
- Do not allow the shore power cable to hang in the water. If it does, a hazardous electric field could be created in the water.
- Never modify the connections on the shore power cable. Use compatible connectors only.
- If the earth fault breaker is tripped, disconnect the shore power cable immediately. In such a case contact a qualified electrician for repairs before the system is used again.

© 2025 Axopar Boats

⚠ DANGER

To avoid an electric shock and risk of fire:

- Switch off the shore power switch before connecting and disconnecting the cable.
- Connect the shore power cable to the boat before connecting it ashore.
- Disconnect the shore power cable ashore before disconnecting it from the boat.
- Close the hatch to the shore power socket on the boat carefully, avoiding getting it wet.

4.2.9 Fuel system

The boat has a fixed fuel system and a water-separating fuel filter on the suction line.

Instead of the fuel system used in the European region, the boats produced for the American region use the EPA (United States Environmental Protection Agency) fuel system regarding NMMA (National Marine Manufacturers Association) certification rules.

See the fuel system drawing in appendix ***Fuel system***. For care and maintenance of the fuel system, see the instructions in the engine manual.

⚠ WARNING

Never start the engines if there is strong gasoline odor present.

⚠ WARNING

Risk of fire.

- Do not smoke or handle open flames when refueling.
- Remember that it is not allowed to store fuel in spaces not specifically designed for it. Since there is no ventilated storage space on the boat, possible spare fuel cans must be stored on deck.

Fuel system component locations

The fuel tank is located in the middle of the keel. Prevent damage to the fuel lines.

- The components of the tank, the fuel filter (if available) and the fuel tank valves are located under the driver's seat.
- The inlet pipe for fuel is located in the starboard side of the deck.

© 2025 Axopar Boats

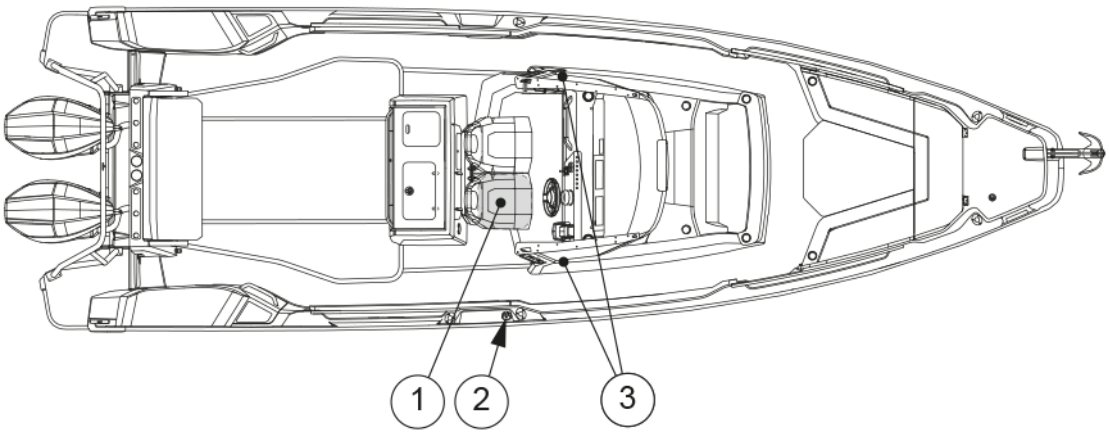

(1) Fuel tank and valve
(2) Fuel inlet fitting
(3) Fuel tank compartment ventilation openings

4.2.9.1 Refueling the boat

The boat's engines run on gasoline. Optional heater system uses diesel fuel.

Before refueling, stop the engine and any electrical equipment. Make sure that the boat is securely docked.

If the boat has optional decking material, wet down the deck with water before refueling. This ensures that any fuel spillage will float on the water and not penetrate the decking material.

Never leave the nozzle unattended during fueling. The nozzle will automatically shut off when the tank is full. Do not try to top off or overfill the tank.

After refueling, make sure the tank cap is properly closed. Before starting engines, ventilate areas where gasoline vapors may have accumulated.

Water reaching the engine's injection system can cause rapid corrosion damage to the precision components in the injection pump components. For this reason, it is vital to check the extra fuel filter regularly for water. Every so often, drain a small quantity of fuel into a suitable container (avoid fuel spillage) and check that there is no condensation water. If there is water in the filter, continue to drain until only clean fuel appears.

The fuel system on the engine is sensitive to air bubbles in the fuel. Always fill the tanks well before they are completely empty. If the system has been run dry, it must be bled before the engine can be started again. See the engine manufacturer's instruction manual before bleeding the fuel system.

© 2025 Axopar Boats

⚠ WARNING

- The fuel system grounding is effective only when the boat is in the water and the system is filled using the nozzle. If filling from canisters, only use plastic containers and pay attention to not overfilling the system. Do not top off.
- Never block access to safety equipment, fire extinguishers, fuel valves or main power switches.
- Never block any ventilation openings made in the boat because their purpose is to clear the air of fuel fumes.
- Never use a wrong type of fuel in the heater or cooker as this may damage them.
- Never use an open flame when detecting leaks.

4.2.9.2 Maintaining the fuel system

Follow the engine manufacturer's maintenance schedule.

- Annually, check the condition of the hoses and make sure that there are no visible cracks, abrasion, or deterioration.
- Replace worn parts with genuine, marine-grade parts only.
- Bi-annually and for winter storage, check the fuel tank compartment for possible accumulated water. This can be done by inserting a thin hose through the aluminium pipe at top of the tank. The pipe guides the hose to the lowest part of the fuel tank compartment. The compartment can then be emptied with wet-dry vacuum cleaner connected to the hose.
- Bi-monthly, inspect the fuel system for presence of water in the fuel tank.

  Presence of water in fuel can be checked by inspecting the contents of the fuel filter.

  If any water is found, it must be removed and the whole fuel tank dried before the tank can be refilled with fuel.
- Examine the fuel tank and lines for corrosion and leaks.

Bi-annually and for winter storage, check the fuel tank compartment for possible accumulated water as follows:

1. Insert a thin hose through the aluminium pipe at top of the tank. The pipe guides the hose to the lowest part of the fuel tank compartment.
2. Connect a wet-dry vacuum cleaner to the hose.
3. Empty the compartment.

4.3 Optional equipment

This section presents the optional equipment and systems available for the boat.

4.3.1 Freshwater system

You can choose to equip your boat with a freshwater system as an optional extra.

© 2025 Axopar Boats

The freshwater system consists of a freshwater tank, pump and accumulator. The boat may also be equipped with a water supply point in the galley and a deck shower and a water supply point for the wet bar.

The tank is located under front deck. The freshwater tank is filled via the inlet pipe on the foredeck.

To turn the freshwater system, switch on the freshwater pump. The pump switch is located on the fuse panel.

Switch the system off when leaving the boat. Do not forget to check filter in the pump regularly.

The dealer is responsible for disinfecting the freshwater tank before sale.

NOTICE

The water from the system is not meant for drinking.

The freshwater system must be thoroughly emptied for winter storage. It is not recommended to use any anti-freeze products in the freshwater system.

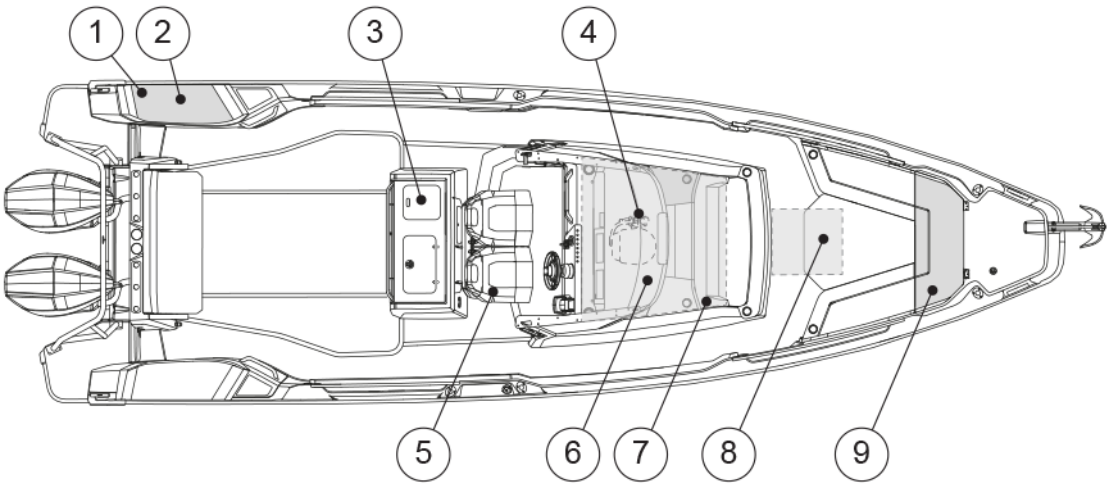

(1) Deck shower
(2) Wet bar tap
(3) Baitwell tap
(4) Freshwater pump switch
(5) Galley tap
(6) Toilet tap
(7) Freshwater pump
(8) Freshwater tank
(9) Water inlet

© 2025 Axopar Boats

The water pump has also two LEDs indicating the operating status and faults in the pump operation. For more information about the signals, please refer to manufacturer’s manual.

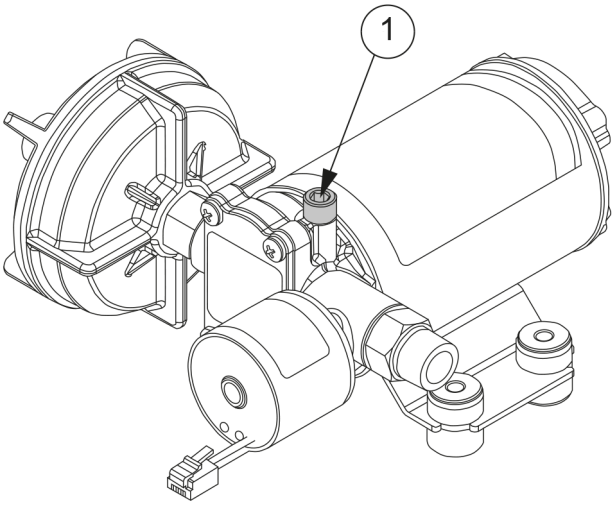

Figure 4.1 Water pump and air release valve

Freshwater system needs to be disinfected and flushed annually or after longer periods of non-use to keep the system in working order.

Disinfection procedure is described below:

1. Flush the entire system thoroughly by running potable water to flow through it.
2. Drain the system completely.
3. Fill the entire system with disinfecting solution and follow the manufacturer’s instructions.
4. Drain the entire system once disinfection process is complete.
5. Flush the entire system thoroughly several more times with potable water.
6. Fill the system with potable water. Freshwater system is now ready to be used.

Maintenance

Annually inspect hose connections, tube fittings and pump electrical wiring connections for proper securing and no chafing. Water pump inlet filter is recommended to be checked and cleaned annually. Running the system regularly helps keep the water pump’s impellers in working order.

4.3.2 Raw water system

A raw water system is an integral component of a boat's seawater intake system.

Raw water system is a hollow chamber that is installed on the hull of a vessel, typically below the waterline. The raw water system is a mandatory subsystem that is required when the boat has any of the following options: main bait livewell and tackle station, fender box bait livewell, or deck wash pump. The raw water system provides seawater reservoir for these systems to use.

Sea chest

Sea chest is an integral component of a boat’s raw water system. The primary purpose of a sea chest is to provide a controlled intake of seawater used for various onboard systems.

© 2025 Axopar Boats

The aluminum 18-liter (5 US gal) sea chest is in the aft of the boat, under the aft deck hatch. It can be equipped with two submersible bilge pumps and it is possible to place seacocks and bait livewell pumps behind the gyro pedestal. The pumps can be accessed by unscrewing the bolts holding the lid of the sea chest.

The outlet valve can be adjusted to control the flow rate as required.

Close the water intake valve when you are not using the equipment which utilizes the sea chest.

Maintenance

All maintenance should be performed by a qualified technician.

Regular inspection and cleaning of the grates is recommended to maintain optimal performance.

- Monthly: Visually check the sea chest. Make sure there are no signs of corrosion such as bubbling paint, pitting, or discoloration.
- Biannually: Check the sealing for leaks.

4.3.3 Wet bar in port fender box

You can choose to equip your boat with an optional wet bar in fender box. The wet bar is in the boat's port side fender box.

The cooling unit for the cooled compartment is located under the fender box and can be accessed via the service hatch under the aft deck hatch.

Maintenance

- Inspect the faucet for leaks or drips.
- Clean the sink and faucet with a mild detergent, avoiding abrasive materials that could scratch the surface.
- Drain and flush the water system to prevent any buildup of sediments or bacteria.
- Check the cooled storage box for consistent temperature and operational efficiency. Clean the interior with a soft cloth and a solution of baking soda and water to eliminate odors and stains.
- Annually ensure all connections, including water supply lines and drain pipes, are secure and free of corrosion.

4.3.4 Septic system

The boat's septic system consists of the toilet seat, the septic tank and the related systems.

© 2025 Axopar Boats

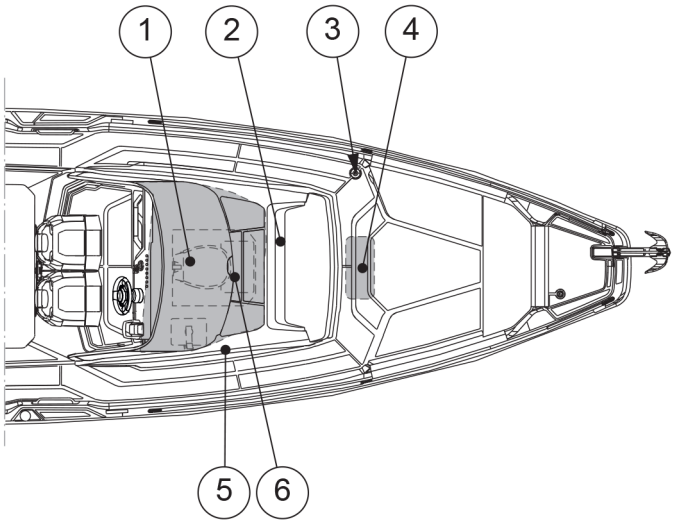

(1) Toilet seat
(2) Septic macerator
(3) Septic tank suction fitting
(4) Septic tank
(5) Toilet seat pump
(6) Septic tank seacock and raw water intake seacock

Maintaining the macerator

The macerator pump can get stuck if it is not used for extended periods of time. Regular use of the macerator helps to prevent this from happening.

If the macerator pump gets stuck, please contact your dealer for repairs.

4.3.4.1 Toilet seat

The boat can be equipped with two types of toilets. The manual toilet seat system uses seawater, and the electrical toilet seat system uses fresh water.

NOTICE

- Never put any other objects but toilet paper in the toilet.
- In order to avoid damages, you must also not pour hotter than lukewarm water into the toilet.
- It is under no circumstances allowed to flush paper towels, fabric or rubber products, hard objects, oil products or solvents down the toilet.

Using the manual toilet

- Before using the manual toilet, open the water intake cock, which is located behind the service hatch.
- Close the cock after use.

© 2025 Axopar Boats

Using the electrical toilet

The electrical toilet is used with a separate operating switch. For more information on the device, see the manual for the toilet.

Maintaining the toilet

- Clean the toilet with a mild cleaner.
- Never use cleaning agents or deodorants which contain pine oil, formaldehyde or chlorine, nor corrosive or petroleum-based agents.

  These materials can damage the plastic and rubber parts in the toilet.
- Lubricate the pump shaft with Vaseline to increase the service life of the seal.
- Flush the toilet system thoroughly with fresh water when the boat is not in use.

4.3.4.2 Septic tank

Avoid environmental pollution!

The blackwater tank is fitted with a deck outlet pump using an international standard type connection. Using the pump, the black water can be emptied to a permanent septic tank ashore. These facilities must always be used.

In areas where there are no permanent septic tanks, the macerator is used to evacuate the contents of the tank straight into the water as follows: Open the sealed seacock. If possible, empty the tank daily and always in deep waters far from the shore. For the location of the pump, see the section ***Septic system***.

The shut-off valve must be closed after the evacuation.

Do not allow the tank to become full. It can lead to paper becoming compacted in the bottom of the tank, making it more difficult to empty.

NOTICE

Before the boat is laid-up for winter storage, the whole system must be cleaned and flushed thoroughly while the boat is still in the water.

The whole system must be thoroughly drained of water when the boat is lifted out of the water.

This measure prevents frost damage, bacteria growth and smells.

Use of antifreeze is not recommended, since it is impossible to guarantee that it reaches all parts of the system.

4.3.5 Navigation system

Your boat can be equipped with multifunction displays (MFD).

Depending on the boat configuration, the boat is equipped with single or multiple screens.

The multifunction display can be used to show electronic charts, plot courses, and navigate the boat. It also acts as interface for marine electronics and other digitally enabled equipment on board.

Refer to the supplier’s manuals for complete user instructions and maintenance instructions of these functionalities and equipment.

© 2025 Axopar Boats

4.3.5.1 VHF equipment

VHF radio allows instant communication between your boat and other boats, marinas, bridges, and maritime authorities.

The VHF radio is the recommended means of communication on the coastal waters, and it transmits messages on high frequency waves. The VHF system consists of a VHF radio unit near the drivers position and a radio antenna located either on the mast or on the roof of the boat depending on the boat model.

Study the provided booklet for the local regulations and the functionalities related to the use of the VHF system.

For your safety, make sure the VHF system is operational before going out to open sea.

4.3.6 Bow thruster

The bow thruster enhances the maneuverability of the bow when docking or performing other maneuvers that require increased operator control.

The bow thruster is powered by the Aux battery.

The batteries must be disconnected from the electronic circuit before changing a fuse. For more information, see the manufacturer's manual.

⚠ WARNING

Incorrect use may cause overheating and short circuiting, and pose a fire risk.

- Use the bow thruster for only short periods at a time.
- Do not exceed four duty cycles (max. 30 seconds long in 25 mins).

If overloading occurs, contact a qualified marine electrician.

⚠ WARNING

- Do not touch the bow thruster or its fuse if the Aux main switch is switched on.

⚠ DANGER

Pinching hazard

Never put your hand or any other body part near a windlass or bow roller in operation.

4.3.7 Anchor windlass

The boat can be equipped with bow windlass.

Operation

To operate the windlass, windlass breaker must be switched on.

© 2025 Axopar Boats

Windlass is operated with a momentary switch. Pushing the up button will raise the anchor and pushing the down button will lower the anchor.

If there is a loss of power to the windlass, check the windlass breaker to see if it needs to be reset. If the breaker keeps tripping after it has been reset, the anchor windlass system is recommended to be inspected by a qualified electrician.

The anchor windlasses are powered by the Aux battery. The battery and its fuse are located in the bow of the boat.

⚠ WARNING

- Do not touch the anchor windlass or its fuse if the main switch Aux is switched on.
- Even if the current is switched off, do not change the windlass fuse. The high current may cause a fatal electric shock.

Manual operation

In case of loss of power, the windlass can be manually operated by disengaging the clutch. Please refer to the manufacturer's manual how to operate the windlass manually.

Before using the anchor windlass

Always check that:

- The windlass is in working order.
- The anchor chain can move freely.
- The anchor and the chain cannot damage the boat when lowered.
- The anchor and anchor chain cannot hit any person.

For more information, see the manufacturer's manual.

While under way

The anchor windlass must be fixed mechanically to prevent it from coming loose when the boat is moving. For more information, see the manufacturer's manual.

⚠ WARNING

Pinching hazard

Never put your hand or any other body part near a windlass or bow roller in operation.

⚠ WARNING

If the windlass loosens when the boat is moving at great speed, it may cause great damage to the boat, its passengers and outsiders.

- Always fix the anchor windlass mechanically in place before getting under way.

⚠ WARNING

- Keep all body parts and clothing away from an activated windlass.

NOTICE

- Do not use the windlass to pull or tow another vessel.

© 2025 Axopar Boats

Maintenance

Salt deposit accumulating on the windlass should be washed away with fresh water regularly to prevent corrosion. For more information, please refer to the manufacturer's manual.

4.3.8 LPG system

The boat can be equipped with an LPG system for a cooker as an optional extra. The system is tested and approved before delivery.

The system consists of a cooker and gas cylinder. The apparatus is equipped with a shut-off valve (in connection with the cooker) and a decompression valve. A ventilation hole is provided on the outside of the hull in the space where the gas cylinder is installed. A fire blanket must be installed right next to the cooker.

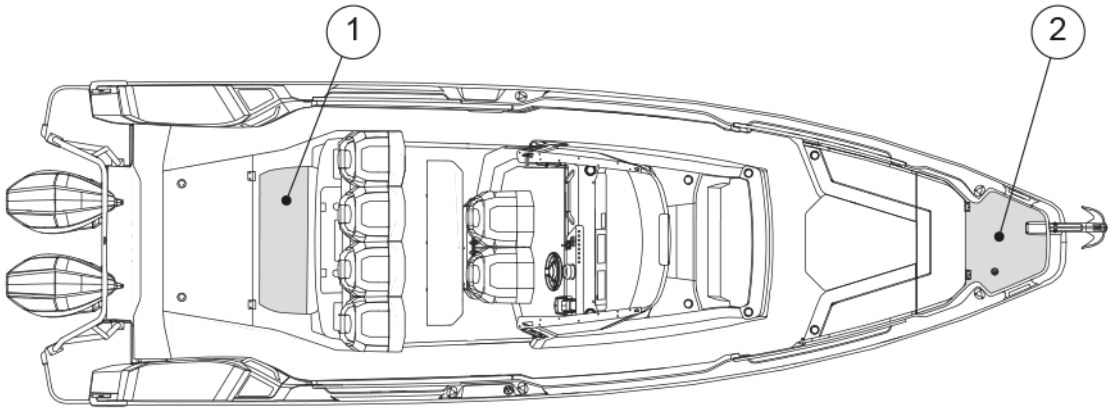

(1) Cooker
(2) Gas cylinder

Fuels that produce a naked flame consume oxygen and discharge combustion products into the boat. Good ventilation is therefore essential when an appliance is in use. If cooker is installed inside cabin, ensure good ventilation and keep doors open.

LPG cylinder housing shall not be used for storage of any other equipment.

⚠ WARNING When installed inside, fuel burning open flame appliances consume cabin oxygen and release products of combustion into the craft; do not use the stove for space heating. Ventilation is required when appliances are in use. Never obstruct any ventilation openings. The ventilation requirements have been calculated to suit the LPG appliances as installed.

- Before opening the valve to the gas container, make sure that the appliance valves are properly closed.
- Store the fire blanket in the required location.

4.3.8.1 Using the LPG cooker

Follow these instructions to safely use the LPG cooker.

© 2025 Axopar Boats

Ventilation

Appliances which burn fuel consume oxygen and discharge combustion products into the boat. Good ventilation is essential when an appliance is in use.

- Never use the LPG cooker for heating the boat.
- Never cover the ventilation openings.

Lightning the LPG cooker

1. Ignite the burner by pushing the knob down. Then turn the gas knob to its maximum position, listen for the gas flow, and hold the knob down.
2. Light the flame by lighting the burner with a match, lighter, or built-in ignition system. Keep pushing the knob for 10 seconds. If released earlier, flame sensor might shut down gas.
3. Adjust the flame by turning the knob to the desired size.
4. Turn off the LPG cooker by turning the knob back to its original, off position to stop the gas.

Valves

- Close the valves on the supply pipes and the container valve when the appliance is not in use.
- Close the valves before refuelling and immediately in an emergency.
- Check that the appliance valves are closed before opening the container valve.
- Keep the valves of empty cylinders closed and disconnected.
- Fit the protective covers, caps or plugs.
- Store spare or empty cylinders on the open deck or in drained areas designed for the purpose.

Replace the regulating valve every 10 years.

The valve contains a thin rubber diaphragm which eventually dries out or swells up. If the diaphragm breaks, gas can escape from the cylinder with full pressure into the system, thus causing a fire.

Inspections

System has pressure gauge installed to LPG cylinder connection. LPG system shall be checked for leakage before each use.

- Close appliance valve.
- Open LPG cylinder valve.
- Allow indicated gauge pressure to stabilize.
- Close LPG cylinder valve, and observe pressure gauge reading for 3 min.
- Pressure gauge reading should remain constant if no leak in the LPG system is present.
- Gauge does not provide an indication of liquid LPG remaining in the cylinder, only its vapor pressure, which is a constant at any given temperature.

If LPG leakage is detected or suspected, the following action shall be taken immediately.

- Shut off the LPG supply at the main supply valve.
- Extinguish naked flames and other ignition sources (heaters, cooking appliances etc.).
- Do not operate electric switches.
- Evacuate the area if possible.

© 2025 Axopar Boats

Inspect the hoses and pipes in the system regularly, at least once a year.

- Replace parts if there is any deterioration or damage.
- Replace the LPG hoses outside the cabin every second year, and the LPG hoses inside the cabin every 3 to 5 years.
- Check the flue ducts at least once a year.
  - Replace the flue ducts if there is any deterioration or damage.
- Check the connection gaskets for the regulating valve always when containers are replaced, and replace the connection gaskets annually.

⚠ WARNING

- Never use an open flame when detecting leaks.
- Do not use solutions that contain ammonia for manual leak testing.
- Never smoke or use open flames when a gas container is being replaced.
- If a leak is detected, shut off the main LPG supply valve and do not use LPG appliances.
- Do not use an installation that has leaked until it has been inspected and repaired by a competent person.

Maintenance

For the LPG cooker maintenance schedule and instructions, see the manufacturer's manual.

⚠ WARNING

- Keep the LPG container in a space designed for it.
- Never leave the boat unattended when LPG appliances are in use.
- Do not smoke or use open flame when replacing LPG cylinders. Close cylinder valves on empty cylinders before disconnecting for replacement.
- Do not modify the craft's LPG system. Installation, alterations and maintenance shall be performed by a competent person. Have the system inspected at regular intervals or as required by national requirements.

- Make sure that you always have free and rapid access to the LPG system.
- The ambient temperature for LPG systems is –20 - +60°C.

NOTICE Never use a wrong type of fuel in the cooker as this may damage the cooker.

4.3.9 Work lights

The boat can be equipped with work lights package. The package consists of 4 flood lights mounted on the 4 corners of the ceiling, LED light bar mounted on the roof pointing towards the bow, and control panel for controlling the lights. The flood lights and the LED bar are dimmable, and the flood lights direction can be adjusted to your needs.

© 2025 Axopar Boats

The flood lights are grouped to bow and aft zones, which can be switched on or off independently. The front mounted LED lightbar is controlled independently from its switch button.

⚠ CAUTION The lights are very bright in their highest setting. Avoid staring directly into the lights.

4.3.10 Searchlight

The boat can be equipped with an optional searchlight. The searchlight can be mounted on the light mast or directly on the roof depending on the boat model. The searchlight is remote-controlled and rotates 360 degrees, allowing you to illuminate objects in any direction.

The searchlight has one-touch auto sweep and S.O.S.

The searchlight has a 30-minute shut-down timer. If the searchlight is left unattended for more than 30 minutes, the searchlight turns itself off.

4.3.11 Solar panel trickle charger

The boat can be equipped with solar panel trickle charging system. The system allows you to maintain and slowly charge the batteries on the boat.

The solar panel is located on the bow end of the roof. The trickle charging system includes a charge controller, preventing battery overcharge. The charge controller is installed in the battery compartment wall.

Maintenance

Ensure that the solar panel is mounted properly. Check for any dirt, debris, and corrosion on the panel. Periodically clean the solar panel with water.

Do not use chemicals, as they can damage the panel.

4.3.12 Gas grill

You may choose to equip your boat with a portable gas grill. Portable gas grill option adds all the components needed to use an external gas grill on board. It includes the gas bottle storage in bow locker, the gunwale mount, and an offset insert adapter, which is designed to mount all Magma brand grills. The option also includes a ventilated gas storage canister under the anchor hatch.

The gas bottle must be stored in a ventilated area.

© 2025 Axopar Boats

⚠ WARNING The gas grill is only allowed to be used when the boat is stationary and must be stowed away before using the boat.

Use the grill outdoors only. Do not use the grill inside the boat.

Do not use the grill under sunshades or any other cover.

⚠ WARNING Never leave hot grill unattended.

⚠ DANGER Carbon monoxide hazard. The grill can produce carbon monoxide. Never use the grill in an enclosed space, such as when using canopy, or inside the cabin of the boat.

4.3.13 Fishing gear

The boat can be equipped with the following optional equipment for fishing.

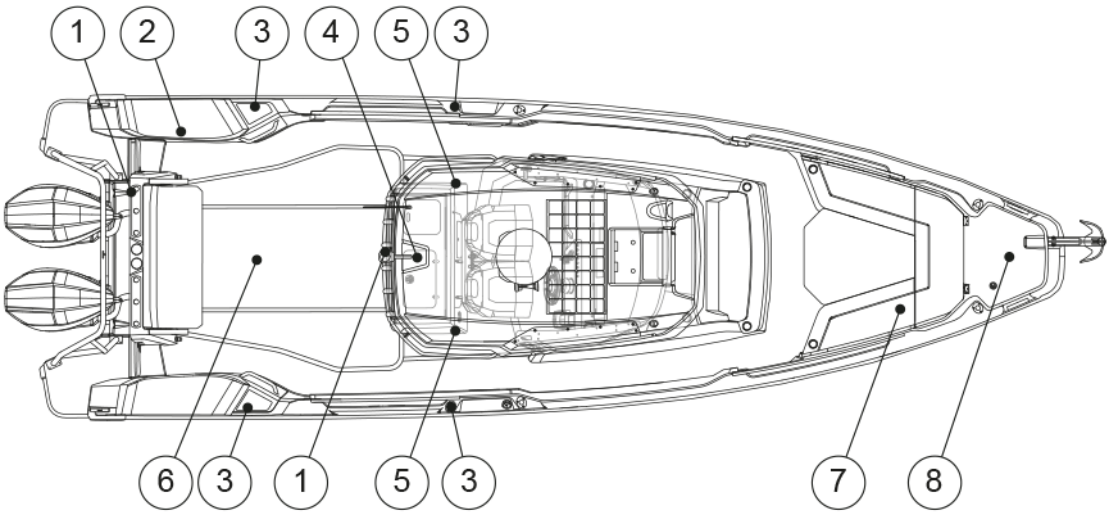

(1) Rodholders
(2) Livewell in fender box
(3) Rod holder
(4) Main bait livewell and tackle station
(5) Outrigger reinforcements
(6) Rod storage
(7) Fish box with macerator
(8) Dedicated assembly location for optional trolling motor

© 2025 Axopar Boats

All of the gear listed here — except the reinforcements for outriggers — are optional.
Axopar does not offer outriggers or trolling motors.

4.3.14 Bait livewell options

The boat has two optional bait livewell storages for fish.

Main baitwell option

Main baitwell option is located behind the front seats. It may contain

- 33 US gal/125 l tank
- a sink
- a water faucet
- raw water wash down
- storage box for lure boxes, and
- a storage for lines.

Port fender box baitwell option

A smaller 18.5 US gal/70 l baitwell in portside fender box.

4.3.14.1 Main bait livewell with tackle station

The main bait livewell is in the centerline of the boat. It contains a 125-liter (33 US gallons) baitwell and a tackle station compartment to keep your lures and reels neatly organized and ready to use. The main baitwell utilizes the sea chest of the raw water system for aerated water.

The pump's switch and baitwell light switch are located on the switch panel on the bow facing the wall of the main baitwell. The water intake valve is located under the aft deck hatch on the sea chest bow facing wall.

To start the seawater circulation, make sure the sea chest through-hull water intake valve and baitwell water intake valve are open and switch on the pump from the switch panel.

The baitwell drain is operated by electric valve. To drain the baitwell empty, open the valve with the **Drain livewell** switch button.

The raw water system intake valve must be open for the baitwell pump to get water.

Maintenance

Inspect and clean the overflow drain and pump strainer from gunk after each use.

1. Clean the inside of the baitwell with distilled vinegar and hydrogen peroxide.
2. Circulate freshwater through the system a few times to rinse it.

© 2025 Axopar Boats

Avoid using harsh cleaners, as they can cause the bait fish to die.

4.3.14.2 Fender box livewell

You can choose to convert a fender box into a bait livewell. Baitwell keeps the bait fish alive by circulating sea water in the well. The baitwell gets its raw water through the baitwell pump located under the deck in the aft. The baitwell has a drain to prevent the baitwell from overflowing.

Running the baitwell

To run the water in baitwell, the water intake valve must be open.

Intake valve is located adjacent to the thru-hull fitting under aft deck, exact location depends on boat model. Baitwell pump switch is located next to the fender box.

1. Open intake valve through the hatch.
2. Turn the pump on. The switch is located next to fender box. If the boat is also equipped with a main baitwell and a tackle station, the switch is located in the main baitwells switch panel. The pump fills up the baitwell until the water starts to run out from the overflow pipe.
3. Leave the pump running for continuous exchange of water.
4. Close the seacock when the baitwell is not in use.

Maintenance

Inspect and clean the overflow drain and pump strainer from gunk after each use.

1. Clean the inside of the baitwell with distilled vinegar and hydrogen peroxide.
2. Circulate freshwater through the system a few times to rinse it.

Avoid using harsh cleaners, as they can cause the bait fish to die.

4.3.15 Deck wash pump

You have the option to upgrade the main baitwell and tackle station with a deck wash system. With the deck wash system you can use seawater to wash the deck from stains and loose dirt.

The deck wash system consists of a seawater pump, hosing, and a spray gun. The system utilizes the sea chest for water source. The pump is self-priming and is not damaged by a short period of dry running.

The deck wash pump is switched on from the main baitwell switch panel. The spray gun is connected to the outlet under the switch panel with a quick coupling.

⚠ CAUTION Do not use pump for any other liquids than freshwater and seawater.

© 2025 Axopar Boats

⚠ WARNING

- If water is not drained from the system before freezing temperatures, damage is likely to occur in the plumbing and the pump.
- Never start a frozen pump. Even if it is drained, it might contain a small amount of frozen water that jams the rotor.

Before winter lay-up

Before freezing conditions:

- Disconnect suction hose from water supply (seawater supply).
- Open the spray nozzle.
- Run the pump until remaining water is expelled.
- Disconnect inlet and outlet tubes.
- Run the pump briefly to confirm that water has been expelled.
- Spray nozzles should remain open and pump fittings should remain disconnected until temperatures are above freezing.

4.3.16 Sunshades

The boat can be equipped with canvas sunshades to provide shade in the aft and bow of the boat.

The sunshades are only for stationary use and must be stowed away before the boat is driven.

Depending on the boat model, the sunshade poles are stored in spring clips on top of the roof or inside a hatch.

Setting up a sunshade

1. String the loops of the sunshade to the ends of the support poles.
2. Mount the support poles on the gunwale sockets.
3. Connect the canvas clasps to the D-rings on the roof.
4. Adjust the tightness of the sunshade so that it’s tight.

4.3.17 Canopy

Optional canopy extends the sidewalls of the console. The canopy has plastic see-through windows, and keeps you dry during rain.

The canopy is mounted on the track running around the ceiling close to the edge. The bottom of the canvas is fastened to the male snaps on the hull and deck.

It is recommended to let the canopy dry before it is stored to avoid growth or unpleasant odors forming.

© 2025 Axopar Boats

4.3.18 Folding aft leaning post

Optional folding aft leaning post allows you to turn the stern of the boat to the seated area.

The folding aft leaning post has a folding bench that tilts from vertical to horizontal position. When folded to vertical position, the folding seat allows you to also use the module as a leaning post, for example when fishing.

⚠ WARNING Foldable seat should not be used when travelling faster than 5 mph/4 kn.

The aft leaning post must be tilted forward before tilting up the engine(s). By pulling the handle towards the engine(s), the leaning post can be tilted forward out of way of the engine(s). The handle automatically locks the leaning post in place when tilting it all the way forward. To bring the leaning post back in position (only when engine is down), pull the handle towards the engine(s) to release the leaning post, push leaning post towards the engine(s) until it stops, then pull the handle towards the bow to lock the leaning post in place.

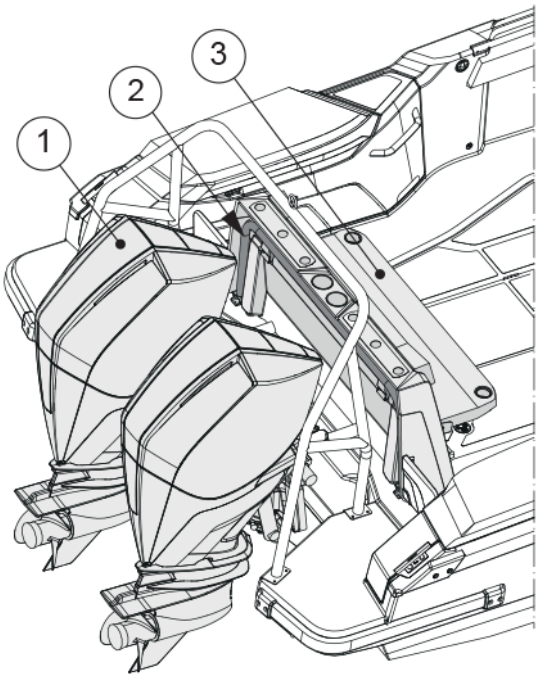

(1) Engine(s)
(2) Handle
(3) Bench

Maintenance

To prevent salt build-up and corrosion, it is recommended to wash the leaning post with freshwater often. Clean it with high quality detergents, and wax using car or fiberglass wax. This ensures that the hinge mechanism stays functional and maintains low noise.

© 2025 Axopar Boats

The folding aft leaning post must be tilted down before the engines are tilted up.

4.3.19 Axopar connectivity

Axopar Connect app and Axopar Connectivity hardware is available as an option on your boat.

This option provides remote monitoring capability and recording of boat usage as trip logs.

Data sources used for the remote monitoring functionality are the dedicated GPS receiver connected to the Axopar Connectivity hardware and the sensor data from the boats NMEA 2000 network (i.e. engine data).

The system also monitors the operation of the bilge pumps and alerts the user if bilge pump is activated either automatically or manually while underway or when the boat is docked.

System will also alert in case bilge pump runs for an extended period and a certain time threshold has been exceeded.

Notifications for the bilge pump operation are saved in the mobile app’s notifications section.

© 2025 Axopar Boats

5 Transportation

5.1 Lifting the boat

Lift the boat only with a lifting beam and lifting straps. Use the specified locations for the lifting straps.

Commission only a reputable lifting company or a boat yard with sufficient lifting capacity to lift the boat. Make sure the company has full insurance cover, in case of any damages.

⚠ DANGER

Risk of serious injury or death by falling load.

- Do not stay under the boat when it is hanging in the crane.

Lift straps may slip on the hull. When appropriate, tie the straps together before lifting.

The position of the straps may need to be adjusted depending on how the boat is loaded.

In addition to the boat's own weight, take into account the equipment and other possible loads in the boat.

⚠ CAUTION

Note the location of the log transducer to avoid damaging it.

- Protect the hull sides well to avoid damages.

The lifting beam must be exactly the same width as the boat. Always take great precautions near and around the boat when lifting.

⚠ CAUTION

Risk of damage to the hull.

Do not lift the boat with a forklift.

The location of the lift straps is indicated in the figure.

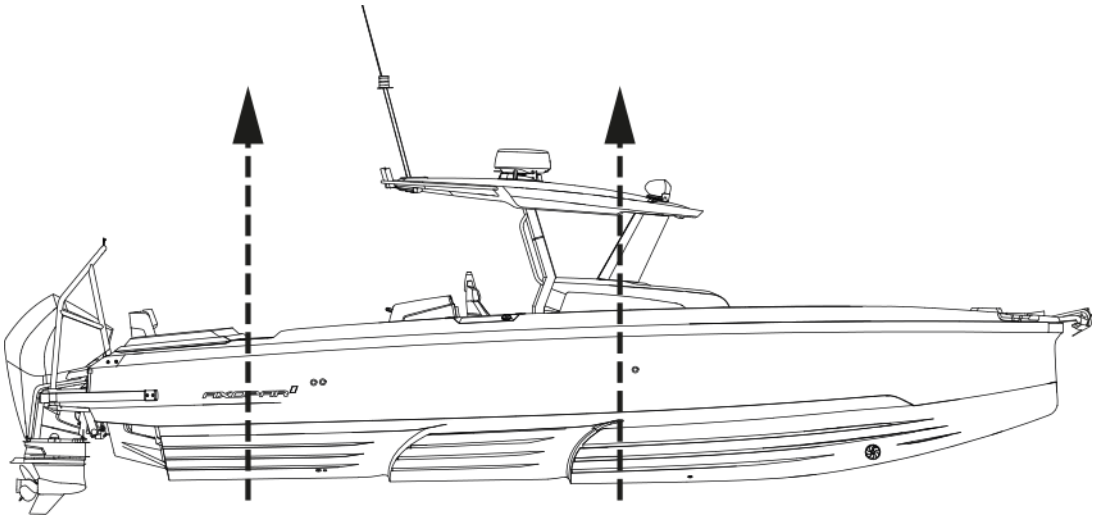

© 2025 Axopar Boats

Before operating any lifting equipment:

- Check and determine applicability of federal, state, or local requirements.
- Follow the lift equipment manufacturer’s requirements and recommendations.
- Check the boat's lift points, weight and other information.
- Straddle lift operation is a highly technical area that requires trained and experienced operators.

During lifting:

- Check the boat for bilge water before lifting.

  Excessive quantities of bilge water can shift, changing the balance of the load.
- Check for thru-hull appendages such as knot meters and stabilizers, rub, spray, and splash rails, so that they are not damaged by the lifting equipment.
- Check the hull structure to locate shafts, rudders, struts, and the forward and aft ends of any keels.
- Check the hull’s structural configuration, including the location of bulkheads, stringers, engines, and tanks.
- Check bilges for water ingress following launch.
- Transport the boat as close to the ground as practicable.

5.2 Transporting and storing the boat

Before lifting the boat onto the trailer, make sure that the trailer is suitable for the boat.

Make sure that there is a sufficient number of supports to distribute the weight properly without excessive point loads, and the capacity and dimensions of the trailer are sufficient to carry the boat and its engines, equipment, battery, boating accessories and fuel on board. Pay special attention to exposed areas and edges of hull, such as spray rails and steps in the hull, during loading, deloading and transportation.

⚠ WARNING

A boat trailer that does not have sufficient capacity or that is poorly maintained can become damaged and cause a danger on the road.

- Make sure that the trailer capacity is sufficient to also carry the weight of the engines, fuel and equipment.

⚠ CAUTION

The hull of the boat can be damaged if there is an insufficient amount of supports on the trailer or during the storage.

The trailer must be a little nose heavy. Make sure that the boat is securely fastened to the trailer, that it cannot move into any direction, and that the side supports provide an even support for the weight of the boat.

Before loading the boat on the trailer:

- Remove any unnecessary weight from the boat.
- Drain the bilge water.

© 2025 Axopar Boats

- Adjust the side supports of the trailer so that the most weight rests on the keel supports, and the side supports only offer lateral support.
- Protect the boat by placing suitable padding between the tie down straps and the boat, if necessary.
- See the engines manual for any instructions on trailering.
- Make sure that the doors and hatches are properly closed.
- Pay attention to any equipment and accessories in the boat during trailering.
  - Make sure you secure all loose items in the boat.
  - Do not use a hood, canopy, tonneau cover or other similar top or cover on the boat during trailering.

    These hoods and covers can become detached at high speeds and damage the boat and cause a danger to traffic.

    A hood or other cover flapping in the wind during trailering can damage the boat surface.
  - Keep the hood in its dedicated storage compartment during trailering, or remove the hood completely, if necessary.

Boat storing

- Make sure that the bow is slightly elevated when in storage, to help potential water escape the deck.
- Make sure the boat is steadily positioned and secured. The weight of the boat needs to rest on the keel.
- Protect the areas of the hull and deck being supported with some form of padding.
- Keep the engines in a downward position.

© 2025 Axopar Boats

6 Operation

The boat owner must take local and international regulations into consideration concerning the boat crew, equipment and handling of the boat. In some countries, a driving license or a separate authorization is required for driving the boat. Special regulations may also apply.

Ensure that the anticipated wind and wave conditions do not exceed the design category of the boat, and that the crew is able to handle the boat in these conditions. Even though the boat is designed for such conditions, they can still be very dangerous. Only a capable, fit and trained crew, using a well maintained boat, can satisfactorily operate in such conditions.

If the boat is fitted with a life raft, carefully read its operation manual. Onboard, the boat must have the appropriate safety equipment according to the boat type and weather conditions. This equipment is compulsory in some countries. The crew must be familiar with the use of all safety equipment and the most important actions in different emergency situations. Sailing schools and clubs regularly organize rescue drills.

The equipment in the boat may differ from the equipment used in the figures in this manual. This might be due to any optional equipment chosen or modifications made after producing this manual. In such cases, contact your local dealer for the operation instructions and additional information regarding the operation of the equipment in question.

Always maintain the boat properly and make allowance for the deterioration that occurs over time and as a result of heavy use or misuse of the boat. Any boat, no matter how strong it may be, can be severely damaged if not used properly. Inappropriate use of this boat not compatible with safe boating is not allowed. It is always important to adjust the handling of the boat to the sea conditions and own boating experience. The gelcoat parts, especially the colored parts, need to be polished and waxed approximately every fourth months to prevent the parts from fading or getting other visual defects.

6.1 Handling devices

6.1.1 Steering console

The controllers are situated so that the driver can easily manage them from the steering console.

The location and quantity of the devices depend on what optional equipment and engine models have been chosen. See the device manuals for further information on the devices.

© 2025 Axopar Boats

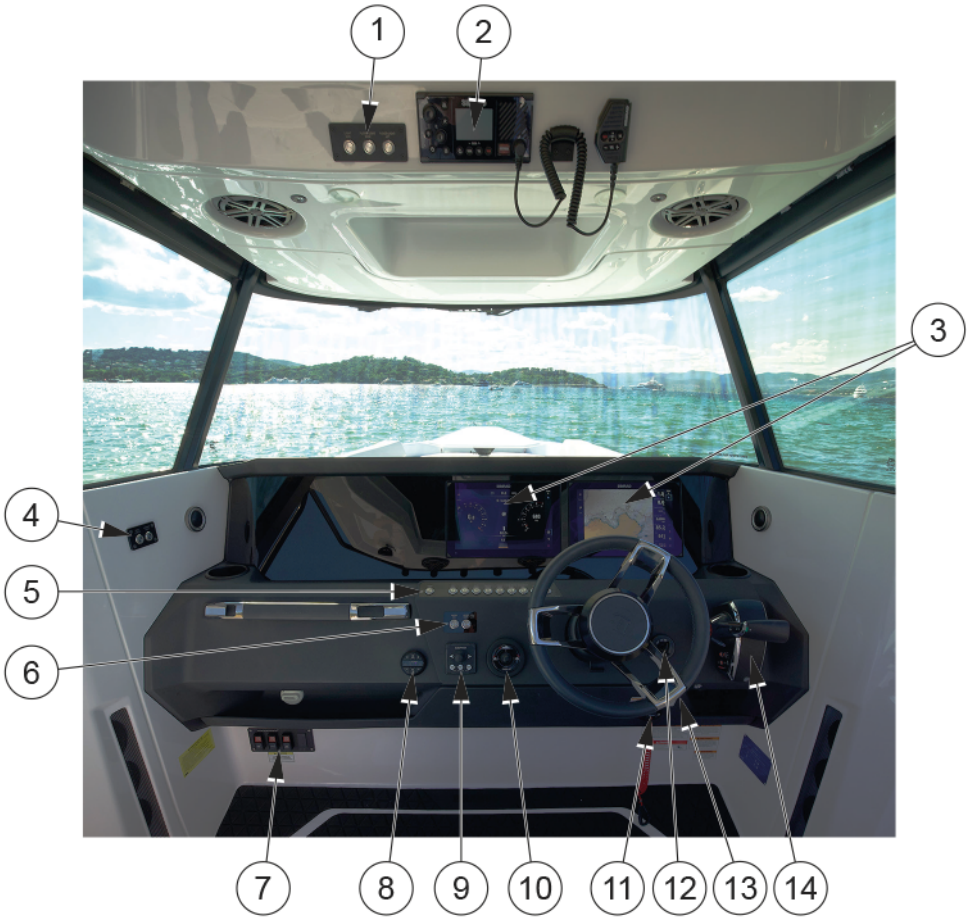

(1) Work light switch (optional)
(2) VHF radio
(3) Chart plotters (optional)
(4) Light switch
(5) Steering console switch panel
(6) Wiper control switch panel
(7) Remote main switches
(8) Audio remote (optional)
(9) Bow thruster control
(10) Trim tabs control
(11) Lanyard switch
(12) Ignition key
(13) Navigation on/off switch
(14) Engine remote control

© 2025 Axopar Boats

6.1.2 Steering console switch panel

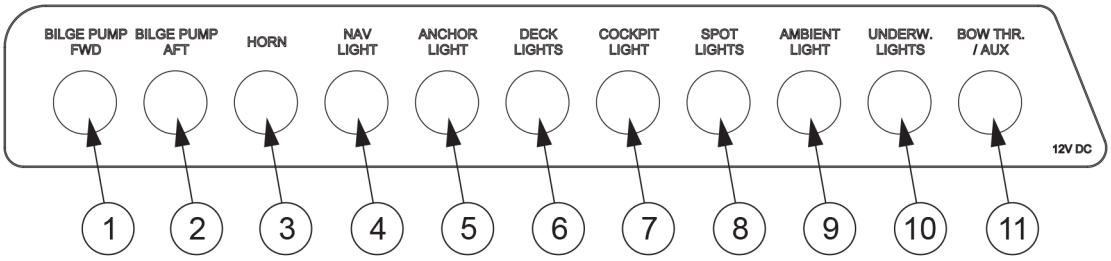

(1) Bilge pump forward
(2) Bilge pump aft
(3) Horn
(4) Navigation light
(5) Anchor lights
(6) Deck lights
(7) Cockpit light
(8) Spot lights
(9) Ambient light
(10) Underwater light
(11) Bow thruster / Aux

6.1.3 Windscreen wipers

The boat’s windscreen wipers are controlled by the switches in the boat’s steering console.

6.1.4 Steering system

The steering system is one of the most vital systems related to safe boating.

The boats are equipped with a hydraulic steering system with the alternatives of power steering and non-power steering systems. Please refer to the collateral manuals provided by the outboard and steering system manufacturer included in the manual package provided with the boat.

The non-power steering system consists of a steering wheel, a helm pump, a hydraulic hosing, and a hydraulic steering cylinder.

The power steering system includes a steering pump to help with the handling of the vessel.

6.1.4.1 Checking and topping up oil

Effective and properly working steering is crucial for the safety of the boat.

- Check the oil level in the pump before casting off.
- For detailed instructions and the steering system oil recommendation, see the manufacturer's documentation.

© 2025 Axopar Boats

6.1.4.2 Steering maintenance

For the regular maintenance of the steering system components, please refer to supplier's manual.

If you encounter issues beyond regular maintenance needs, please contact your boat dealer immediately for service.

6.1.5 Throttle lever

The engine throttle and shift are controlled by the electronic throttle lever. To start the engine, the lever must be in the neutral position. The throttle lever is used to control the engine's RPM which affects the speed of the boat.

Moving the lever forward shifts engine into the forward gear, and moving the lever backwards shifts the engine into the reverse gear. Progressively moving the lever in one direction will increase the speed of the boat in that same direction.

For detailed guidelines about safe boating and component maintenance, please refer to the provided outboard engine literature. If you encounter issues beyond regular maintenance needs, or if noticeable failures occur, please contact your boat dealer immediately for service.

⚠ WARNING Always make sure no one is close to the propeller when starting the engine or engaging the propeller! Acknowledge the information provided on the helm's warning labels.

6.1.5.1 Trim and tilt

The engine can be raised or lowered with the trim controls in the throttle lever.

Raising and lowering the engine is needed when trailering or launching the boat. Adjusting the trim angle of the engine also allows optimizing the run angle for the boat to achieve optimal performance or fuel efficiency.

When raising the engine(s) all the way, make sure the engines are facing straight aft, and no optional equipment such as foldable seats or aft deck gates are in the way.

Refer to the supplier's manuals for detailed operation instructions, maintenance, and warranty information.

⚠ WARNING Raising the engines out of the water without paying attention to surrounding equipment such as aft deck gates, foldable seats or waterski frame may cause damage to the engines.

6.1.6 Starting the engine

See the engine manufacturer's manual for engine information.

1. Set the engine lever in neutral.
2. Turn the ignition on and check the fuel level.
3. Start the engine by turning the ignition key.

© 2025 Axopar Boats

4. Check that the gauges for oil pressure and voltmeter show normal values.
5. Run the engine to operating temperature at idling speed. Never rev up a cold engine.

⚠ DANGER

Risk of carbon monoxide poisoning.

Be aware of the risks with engine exhausts. For example, under turbulence or disadvantageous wind conditions, exhaust can enter the boat. If this happens, avoid idling the engines. If these problems occur under way, do not open the hatches and ventilators, as it can worsen the problems. Instead, you may try solving the problems by changing the boat's speed or weight distribution.

⚠ WARNING

Never step onto the swim ladder when the engine is running. Stop the engine while the steering and propeller are being inspected.

⚠ WARNING

Do not operate this boat with an engine that exceeds the maximum engine power recommended by the manufacturer.

6.1.7 Joystick piloting

Your boat may be equipped with a joystick piloting (JPO) system. This system allows you to intuitively control the vessel at slow speeds with the joystick located in the helm area.

Operating the boat with the joystick is well suited for close quarter operations and when docking. The JPO system is ready to be used when the engine remote control levers are both in neutral position and the indicator light around the joystick turns green.

The joystick gives three axis control: fore and aft, port and starboard, and rotational, or any combination thereof. Moving the the joystick to starboard causes the boat to move sideways to starboard. Rotating the joystick causes the boat to rotate around its center. The joystick is proportional, which means that the further the joystick is moved from the center, the more thrust is applied into that direction.

The JPO system also comes with autopilot modes such as Skyhook, auto heading, and route mode (waypoint sequencing).

Please read the manufacturers user manual thoroughly before using any features of the joystick piloting system.

⚠ CAUTION

Factors such as wind, water conditions, thruster battery voltage (if equipped), and boat loading may degrade the accuracy and response of the JPO system.

⚠ WARNING

Avoid serious injury or death.

Even when engaging autopilot features of the JPO system, the operator must always stay at the helm. The JPO systems autopiloting features does not respond to hazards, obstacles, or swimmers in the vicinity of the boat.

⚠ DANGER

Before activating autopilot features such as Skyhook, auto heading or route mode, check that no one is in the water and tell passengers not to enter the water. Stop the engines immediately whenever someone is in the water near the boat.

© 2025 Axopar Boats

6.2 Swivel seat - Driver and passenger seats

The driver and passenger seats are operated with locking handles.

⚠ DANGER The locking handles must be in the locked position before the boat speed exceed 5 knots.

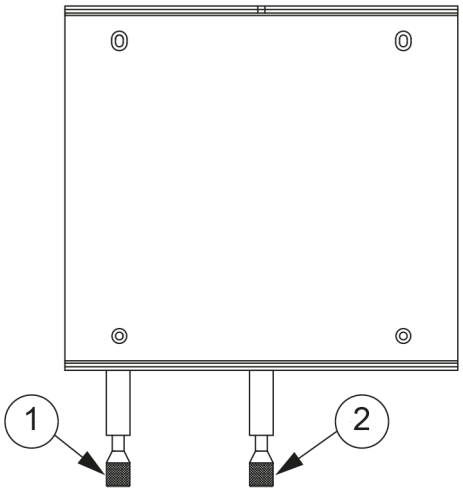

(1) Rotation locking handle
(2) Moving locking handle

- For the rotating function, press the locking handle down to release the lock.
  This allows you to rotate the seat on the post.
- For the moving function, lift the locking handle up to release the lock.
  This allows you to move seat from back to front.

6.3 Inspecting the boat

Due to safety reasons, the below listed inspections must be carried out before and after using the boat.

6.3.1 Checklist: Regular inspection before leaving harbor

Safety

Make sure that:

- All the people onboard have life jackets.
- The wind and wave conditions do not exceed the design category of the boat.
- The dead man's switch is switched to driver.

© 2025 Axopar Boats

- There is a fire extinguisher (or several) onboard and their approval/inspection date has not expired.
- The needed ropes and anchor are onboard.

Draining and tightness

Check that:

- There is no water in the bilge.
- All the bilge pumps are functional.
- The bilge has no signs of fuel or oil leaks.
- All deck hatches are tightly closed.

Electrical and engine

Check that:

- All the fuses are intact.
- The main switches are switched on.
- The batteries have enough power.
- The engine works properly.
- The engine cooling water flows as expected.
- The fuel level is sufficient.

⚠ WARNING The specified tank capacity is not necessarily fully available, depending on the trim and load on board. The tank must always be kept at least 20% full.

6.3.2 Checklist: After using the boat

Make sure that:

- The main switches are switched off.
- The septic tank discharge valve is closed.
- There is no water in the bilge.
- The bilge pumps are functional.
- The deck draining works properly and all the draining valves are open.
- All deck hatches, roof canvas and doors are tightly closed.

6.4 Handling the boat

6.4.1 Checklist: Boat handling before leaving harbor

For safe navigation under all weather conditions, proper sound signaling equipment in compliance with regulations (COLREG, 1972) must be carried on board. Make sure that the sound signaling equipment on the boat is compliant with these regulations.

© 2025 Axopar Boats

⚠ CAUTION According to national regulations in some countries, it is a legal requirement to wear a life vest at all times.

- Check that the boat and its equipment are in seaworthy condition.
- Always listen to long-term weather forecasts when planning longer trips.
- Always make sure there is enough fuel and freshwater in the tanks.
- Check that all items on board are properly stowed and adequately secured to manage rough sea and wind conditions.
- Make sure that the swim ladder is raised out of the water before moving off.
- Make sure that the steering is correctly positioned before starting.
- All persons on board must wear an appropriate life vest when on deck.

6.4.2 Leaving the jetty

Before casting off, consider how to best leave the jetty.

- Check what the wind direction is.
- If the boat has two engines, move away from the jetty by engaging the engine nearer the jetty astern at idling speed and engaging the other engine ahead at idling speed on.
- The boat will swing out from the jetty astern. As the bow will move against the jetty, fend off properly.

With only one engine this can be a little more challenging, especially if the wind is pressing the boat firmly against the jetty, you have to use a spring to get the stern out.

- Firmly fend off the bow from the jetty.
- Take a line from the bow around a bollard or cleat, so that it can be easily let go.
- Engage idling speed ahead and turn the rudder so that the stern glides out from the jetty.
- When the boat has reached a position, where it can safely be reversed, release and retrieve the line, quickly center the rudder and engage astern.

⚠ CAUTION Gather in all lines and fenders while you are still in sheltered water. A rope around the propeller can disable a boat.

6.4.3 Driving the boat

Going out in a motor boat involves responsibility not just to those on board, but also to others we meet on the water. Showing consideration for others makes boating comfortable. Everyone has the same right to be at sea, whatever kind of boat they go afloat in.

The physical laws that apply to a boat are rather different from, for example, those affecting a car, as are the possibilities of controlling it.

You can influence a boat’s behavior and the level of comfort on board primarily by adapting the speed to the prevailing sea conditions and by the intelligent use of the trim tabs. A planing boat rides almost level in the water at maximum speed. As the speed of the boat is reduced the trim angle increases and the bow rises slightly. This is normal, and is a prerequisite for good performance.

© 2025 Axopar Boats

6.4.3.1 Dead man's switch

If the boat is equipped with a dead man’s switch, attach its lanyard to yourself immediately after detaching the mooring lines. For more detailed instructions, see the engine manual.

It is very important that the boat stops if you for some reason fall overboard or stumble on board, particularly if you are alone. However, remember to detach the lanyard from your wrist before docking or beaching operations to prevent the engine from stopping unintentionally.

6.4.3.2 Driving at high speed

Although the boats have passed the CE requirements for swerve tests at full speed, Axopar Boats does not recommend making sharp turns at high speed. When exceeding a certain speed limit any hull construction might lose its grip. This might lead to passengers hurtling out of the boat, especially in a single engine configuration.

- Do not use the boat if it has an engine with a higher power rating than indicated on the capacity plate.
- Do not drive the boat at high speed if the engine's rig angle is negative (bow down).
- Do not drive at full speed on congested waterways or if the visibility is limited because of weather conditions or waves.
- Reduce your speed and wake as a matter of courtesy, and also for the safety of yourself and others.
- Observe and obey speed limits and prohibitions associated with a swell.
- Follow the rules of navigation and the requirements of COLREG (Convention on the International Regulations for Preventing Collisions at Sea).
- Always make sure that you have the space needed for avoiding collisions and coming to a halt and for evasive maneuvers.
- Always use a dead man's switch if available.
- Reduce speed in high seas for increased comfort and safety.
- Learn the boat's speed potential. Utilize this knowledge for economical and safe cruising.
- Avoid using high speed along with large rudder movements when going astern, because that places great strain on the rudder and steering mechanism.
- Avoid sudden steering maneuvers at high speeds.
- Avoid staying in the bow area when driving at high speeds.

Avoid sudden changes in travel direction at high speed. Let the boat come to a stop, and the engine rev down before shifting between forward and reverse. Otherwise excessive strain is put on the engine, which could cause the engine to stop. In the worst case, sea water may enter the engine.

A right-handed propeller rotates clockwise and a left-handed propeller anti-clockwise, seen from the stern. The rotation of the propeller is critical for steering the boat. The right-handed propeller pushes the stern of the boat to starboard when the engine is engaged ahead and to port when it is going astern. The direction of rotation of the propeller has a major impact on the turning radius. A right-handed propeller gives a smaller turning radius to port than to starboard. This is called the propeller's paddlewheel effect.

The boat's propellers have considerable propulsion power that provides powerful acceleration. Take this into consideration to avoid dangerous situations arising from this.

© 2025 Axopar Boats

⚠ DANGER A revolving propeller is life-threatening to a swimmer or a person who has fallen overboard.

Use the dead man's switch and turn off the engine when someone is climbing on board.

6.4.3.3 Driving in rough seas

Never go out in rough seas, if you are uncertain whether the boat and those on board can cope. Follow these simple rules.

- Be well prepared.
- Remember to secure loose equipment.
- Always have a sea anchor and other emergency equipment easily accessible.
- Avoid breaking seas that can appear close to land and over shallows.
- If there are significant waves, always reduce speed to guarantee the safety of the persons on board.
- Use the trim tab to trim the bow down to reduce hull slamming in a head sea.

In a head sea

- Adjust speed to suit the size of the waves.
- Adjust the trim angle to the size of the waves. Avoid taking seas beam on.

In a following sea

Remember to keep the bow high in a following sea. Avoid crashing through waves, maintain low speed. If necessary, deploy the sea anchor to reduce speed.

Planing boats can be particularly exposed in rough following seas. The stern of the boat rises and the rudder does not answer, so the boat broaches while the bow cuts down into the sea.

6.4.3.4 Maneuvering in narrow channels

When maneuvering the boat in narrow channels, the engine speed must be kept as low as possible so that maneuvers are calm and steady.

In difficult wind and current conditions, more revs might be necessary to make full use of the power of the engine. In these conditions, it is important that maneuvers are made quickly and precisely to prevent the boat from drifting into trouble for example.

A good rule before starting a maneuver under difficult conditions, is to think through the different situations which could arise. Pay attention to the wind and current conditions and decide in advance which maneuver you will make. It is also important to brief crew members on what they need to do in different situations.

Always keep in mind that the stability of the boat may be reduced when towing.

⚠ CAUTION Even a nonslip molding can be slippery to walk on when the deck is wet.

© 2025 Axopar Boats

6.4.4 Visibility from steering position

The International Regulations for Preventing Collisions at Sea (COLREG) demand that a proper lookout is kept at all times, and the *right of way* rule is followed.

The following factors can considerably reduce visibility, among other things:

- Gear trim angle
- Trim tab angle
- Load and load position
- Speed
- Rapid acceleration
- Changeover from displacement speed to planing
- Sea conditions
- Rain and thunderstorms
- Darkness and fog
- Inner lighting when under way in the dark
- Position of curtains
- People and equipment that block the driver's view.

⚠ WARNING Make only small adjustments at a time. Holding down the button for the trim tab for any length of time can result in partial loss of control of the boat.

6.4.5 Using the trim tabs

A boat does not need trim tabs to get up on the plane or to give good performance. However, trim tabs are a very useful aid when used correctly.

There are two situations in particular where the trim tabs need to be used:

- When it is desirable to trim the bow down in a rising sea and at speeds between going up planing and cruising speed.
- When running with a strong beam wind.

A planing boat always leans into a strong side wind. This reduces the boat’s seakeeping qualities, which is why listing to one side needs to be eliminated as far as possible. Lowering the trim tab on the windward side brings the boat back into normal attitude.

For trimming the bow down, both trim tabs are used in parallel. Begin by retracting both trim tabs completely, then lower both of them a little at a time, so that you retain complete control over how the boat is affected. When running with a following sea, both trim tabs always need to be fully raised. The reason for this is that boats have a tendency to “dive” in a strong following sea, which can result in uncontrollable slowing. Therefore you must run the boat with a high bow angle in a following sea.

6.5 Preventing falling overboard

The boat’s working decks are areas where people can move about when the boat is being maneuvered.

© 2025 Axopar Boats

The working deck area is shown in grey in the figure.

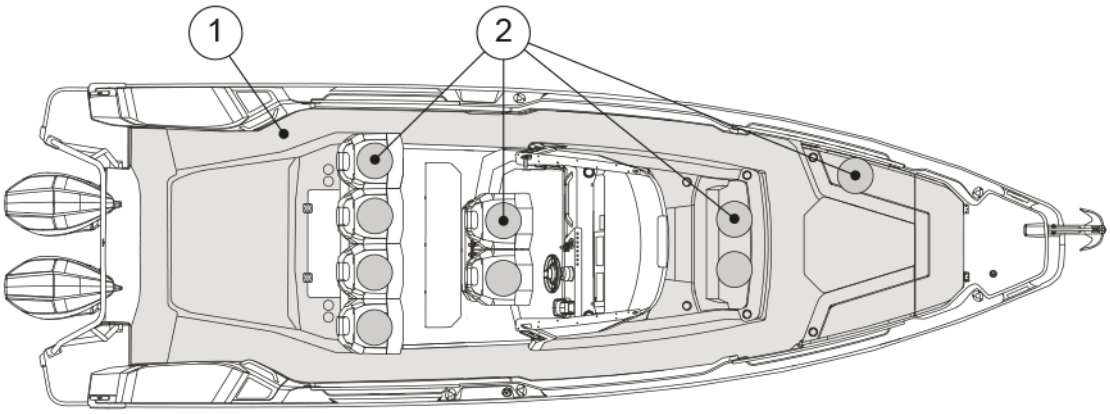

(1) Working deck area
(2) Seats

Do not sit, stand or spend time in other parts of the boat while the boat is under way.

Moving about in the aft part of the aft deck and on the front deck while the boat is under way is not recommended.

If a person has fallen into the water, the easiest way to get back on board is to use the swim ladder. The ladder can be pulled down also from the water.

Staying on deck

⚠ WARNING Staying in the bow of the boat is not recommended in speeds exceeding 30 knots.

⚠ DANGER A revolving propeller is life-threatening to a swimmer or a person who has fallen overboard.

- Use the dead man's switch.
- Turn off the engine when someone is climbing on board.

If the sun deck cushions or the front deck table are in place, observe the maximum speed of 15 knots to avoid the cushions or table detaching at speed or in high waves.

6.6 Anchoring, docking and mooring

6.6.1 Fastening points

Fastening points (or cleats) are located both at the stern, midship and bow.

© 2025 Axopar Boats

- When anchoring or towing, the forward force is 32.2 kN.
- When mooring the forward force is 26.3 kN.
- When mooring the rearward force is 22.5 kN.

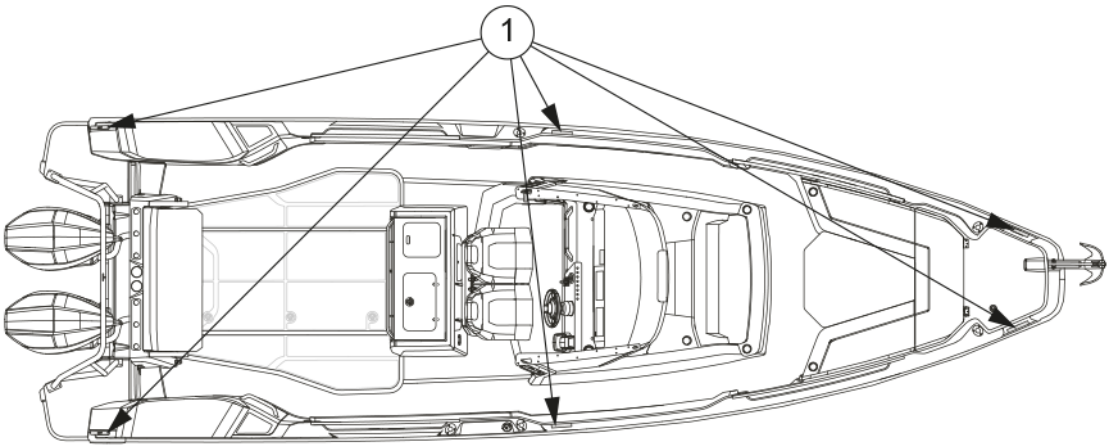

(1) Fastening points

⚠ CAUTION The breaking strength of lines shall in general not exceed 80% of the breaking strength of the fastening points.

6.6.2 Docking

Always brief your crew how you are planning to dock. Fenders and at least one mooring line fore and aft must be in place before approaching the jetty.

It is always easiest to dock against the wind. Try to hold the bow exactly into the wind and maintain sufficient speed for the boat to answer the rudder. If the bow is blown off in one direction, back out and repeat the maneuver. Bring the bow up to the jetty, and make sure you get a line ashore quickly.

Docking with a side wind is a little more difficult. Do not steer parallel to the jetty letting the boat blow in as there is always a risk of the bow being blown off towards other boats or the jetty. Instead, try to maneuver the boat so that the wind comes directly from astern. Then the boat can be maneuvered straight ahead since the wind helps hold the boat on a straight course. It is good to have someone on the foredeck that can go ashore and quickly turn the bow in the desired direction after the boat has stopped completely.

Try to always avoid sharp movements of the throttle, since idling speed in ahead and astern is generally adequate. Sharp movements of the throttle can lead to panic maneuvers.

⚠ CAUTION The tensile strength of the lines or chains should normally not exceed the strength of the fastening point in question.

© 2025 Axopar Boats

6.6.3 Checklist: Before anchoring

1. Check the chart to see if anchoring is permitted in the area.
2. Listen to the weather forecast for the area and take note of the expected wind conditions.
3. Switch on the echo sounder.
4. Study the seabed conditions and make sure that there is good holding ground.
5. Check that the safety chain has been released from the anchor.
6. Wait until you have reached the intended anchoring point before lowering the anchor.
7. Let out the anchor line equal to at least three times the depth of the water.
8. Put the engine in astern to check that the anchor has taken hold (only when bow anchoring).
9. Note your position on the GPS. Regularly check that the boat has not moved from its position.
10. Set the echo sounder to “Anchor Watch”.

⚠ WARNING Always fix the anchor in such a way that it is securely fastened onto the boat. An anchor that falls off when under way may cause serious damage to the boat and mortal danger to the crew.

6.6.4 Towing and mooring

⚠ CAUTION When towing another boat or being towed, always drive slowly. If the boat you are towing is of the displacement hull type, never exceed its hull speed.

- Always attach the tow line so that it can be detached under load. It is the owner’s and users' responsibility to ensure that the mooring lines, towing lines, anchor chains, anchor lines and anchors are adequate for the vessel’s intended use.
- Always remember that the stability of the boat may decrease when being towed.

© 2025 Axopar Boats

7 Maintenance

7.1 Cleaning and maintaining the gelcoat surface

The gelcoat surface of the boat is subjected to environmental conditions which can, under certain circumstances, lead to deterioration of the surface. Overtime, these external factors such as saltwater, high UV exposure and temperature variation, can have an effect on the gelcoat surface.

Generally, gelcoat should last 3 years without showing any significant signs of yellowing, chalking, or other deterioration in typical conditions.

NOTICE

Clean and maintain regularly all the gelcoat surfaces on the boat.

If the regular cleaning and maintenance is neglected, or if the boat is exposed to certain environmental conditions where it is berthed, deterioration of the surface finish such as fading, discoloration and brittles may become visible over time.

- Wash and clean the boat after every trip, and weekly if it is stored outside uncovered.
- Wax the boat twice a year if used all year, otherwise annually.
- Inspect the gelcoat surface annually for signs of deterioration, such as brittle surfaces or changed color tones.
- Small scratches or discolorations can be fixed by buffing or polishing.
- Severe scratches, discoloration or oxidation may require wet sanding before buffing, polishing and vaxing.

  Wet sanding is recommended to be performed by your Axopar dealer or a trained professional.
- When the boat is not in use, keep the gelcoat surface out of the sun or cover the boat with a canvas tarpaulin.

  Do not use plastic or other non-porous materials, which can trap moisture between the cover and the surface.

Washing

NOTICE

Use a cleaning product specially made for boats. Do not use household cleaning products, chlorine, acids or similar as they may damage the boat surface due to their improper pH value.

Wash the boat after every trip by using a mild cleaning product. Dilute the cleaning product with fresh water according to the instructions on the product label.

1. Rinse the deck and hull with fresh water to remove loose dirt.
2. Wash the surfaces with the diluted cleaning product and a soft-bristled brush.
3. Rinse off with fresh water.

Waxing

Waxing the gelcoat surface restores gloss and protects the finish. Only use wax recommended for gelcoat, and follow the product instructions carefully.

© 2025 Axopar Boats

Wax can either be applied by hand using a clean rag, or with an orbital-motion buffing machine.

NOTICE If using a buffing machine, do not exceed the speed of 1200 rpm. Using a higher speed may burn the gelcoat.

NOTICE Do not wax a gelcoat surface in direct sunlight.

1. Apply wax and wait for a few minutes until the wax looks dry.
2. Buff the wax either by hand using a clean rag, or by using a buffing machine.

   Buff in circular motions until the surface is clean and glossy.
3. Finish by wiping the potential wax residues off with a clean rag.

Polishing and buffing

Small scratches or discolorations can be fixed by polishing and buffing the boat. If the surface has severe discoloration or oxidation, wet sanding is recommended before polishing and buffing.

- Polishing compounds remove small scratches and discolorations.
- Buffing compounds contain abrasive and remove deeper scratches or oxidation.

  Buffing compounds can be used, for example, to remove scratches on the hull caused by the fenders.
- After using the buffing compound, use polishing compound to achieve the best possible finish.
- Follow the product instructions of the compound carefully.

Polishing and buffing compounds can either be applied by hand using a clean rag, or with an orbital-motion buffing machine with a polishing pad.

NOTICE When using a buffing machine, do not exceed the speed of 1200 rpm. Using a higher speed may burn the gelcoat.

NOTICE Do not polish or buff a gelcoat surface in direct sunlight.

1. Apply polishing or buffing compound on the surface and wait for a few minutes until the compound looks dry.
2. Polish or buff the compound either by hand using a clean rag, or by using a buffing machine with a polishing pad.

   Buff in circular motions until the surface is glossy.
3. Wax the surface.

Wet sanding

NOTICE Wet sanding is recommended to be performed by your Axopar dealer or a trained professional.

© 2025 Axopar Boats

Severe scratches, discoloration or oxidation of the gelcoat surface may require wet sanding. Wet sanding can be done either by hand or by using a machine.

NOTICE When using a machine, do not exceed the speed of 1200 rpm.

Using a higher speed may burn the gelcoat.

NOTICE Do not wet sand a gelcoat surface in direct sunlight.

1. Spray water to the area that needs to be sanded.

   NOTICE Keep the surface continuously moist while sanding.

2. Sand the surface with a 1000 grit sandpaper (for example Mirka Abralon).

   If you use a machine, use a low rpm speed to get the best result.

   Keep sanding until the entire surface is equally matt.
3. Sand the surface with a finer 1400 grit sandpaper.
4. Sand the surface once more with an even finer-grit sandpaper.

   This saves time in the buffing and polishing stage.
5. After sanding, when the surface looks equally matt, rinse the surface with fresh water and allow to dry.
6. Buff and polish the surface to get the gloss back.
7. Wax the surface.

7.2 Antifouling

Painting your boat's hull with antifouling paint is worth considering if your boat is most of the season in water.

Boats that are frequently lifted out of the water and relaunched during the boating season can be affected by antifouling oxidization. Out-of-the water, antifouling paint will oxidize, which will prevent the biocide release and slowly cause antifouling to lose its effectiveness. Follow the paint manufacturer's specifications for launching window.

Antifouling wears gradually over time, depending on factors such as the location where the boat is used and how often the boat is used. As a rule of thumb, antifouling lasts one season once applied. When the antifouling needs to be repainted, it is important to use the same antifouling paint as the existing antifoul, or to scrub off old antifouling paint down to gel coat. If different antifouling paints are used, there is a risk that the composition of the paints are incompatible, preventing the antifouling paint from working.

Contact your nearest Axopar dealer in antifouling repainting and condition inspection related matters.

© 2025 Axopar Boats

7.3 Maintaining the interiors

7.3.1 Wooden interiors

The interior details of the boat, such as the locker doors and drawer fronts and wooden strips, are made of oiled wood.

- Clean the wooden interior details with a damp cloth and a small amount of soapy water.
- Treat the wooden surfaces again every year to protect the wood.

7.3.2 Plastic and painted surfaces

1. Wet the surface evenly with water before the actual cleaning.
2. Remove stains.
   - Remove regular stains with a brush and a lightly diluted cleaner.
   - Remove grease with a brush or a sponge and window cleaner.
3. Clean the surface afterwards with sponge and water.
4. Wipe dry with a piece of cloth.

7.3.3 Fabrics

The interior fabrics are washed according to separate washing instructions (marking on the fabric).

In case the marking is not visible:

1. Wash in 40°C with a light spin cycle.
2. Hang to drip dry.

The material may slightly shrink. If you want to avoid shrinking, take the fabrics to a dry cleaner.

7.3.4 Doors and hatches

- Clean the tracks of sliding doors and hatches regularly and lubricate, if necessary.
- Lubricate handles and locks with regular lock lubricant.

7.4 Maintaining the cover

New covers may leak initially, as the seams need to swell.

During use

To prevent quick deterioration of the cover, secure it tightly in a folded-up position to prevent flapping.

© 2025 Axopar Boats

After use

NOTICE

- Hang to dry. Never use a drying cabinet or iron to speed up drying.
- Check that the cover is completely dry before stowing. Stowing a moist cover can cause mold damage.
- Store the cover in dry indoor conditions for the winter.
- The cover must not be stored in the boat.

7.4.1 Cleaning the cover

The cover needs to be thoroughly cleaned two or three times a year.

NOTICE Never use high pressure washers or chemical cleaning agents.

1. Let the fabric cover soak for at least 24 hours.
2. After soaking, wash the inside and outside of the cover with a sponge or a soft brush.

   Use mild soapy water and plenty of water, max. 30°C.
3. Rinse thoroughly with freshwater.

   Mix 12% vinegar in the final rinsing water to neutralize the soap residues.
4. Hang the cover to drip dry.

7.5 Protecting underwater metal parts

Boat's underwater metal components, such as thru-hulls, seacocks, trim tabs, internal components and propellers, are subject to electrolytic corrosion. Electrolysis and galvanic corrosion (corrosion of dissimilar metals in salt water) can occur in marine environment due to external factors such as stray currents, polluted waters, or proximity of other vessels. It is important for boat owner to be aware of the phenomena, as they can cause serious deterioration over time.

Signs of electrolytic corrosion are, for example, white, powdery substance on exposed metal such as propellers or breakers, or thru-hulls and seacocks turning greenish. If the corrosion has progressed far, even deep pitting can appear on the part’s surface.

The boats are equipped with sacrificial anodes to protect the metal parts from galvanic corrosion. Additionally, boats equipped with shore power have galvanic isolators to stop low voltage currents from flowing through the boat.

All underwater metal parts need to be inspected annually for signs of corrosion. Additionally, underwater thru-hulls and seacocks are recommended to be replaced every 5 years. Please see the section ***Preventing corrosion*** for more details.

© 2025 Axopar Boats

7.6 Preventing corrosion

Sacrificial anodes are installed on the boat's trim tabs and engines to protect metallic parts from corrosion damage. The anodes need to be replaced regularly as they wear out to protect other metallic parts.

- Inspect the anodes monthly.
- Replace them when approximately fifty percent of the anode has deteriorated.

In general, anodes need replacement once a year in fresh water, and more frequently in saltwater environment. If there is an increase in the consumption speed, it can be a sign of electrical issue and the root cause should be investigated.

7.7 Preventing frost damage

- The bilge pump system is fitted with a water lock on the hose.
  - Detach the hose and fully drain the water from the water lock and run the pumps dry. Otherwise the pumps may freeze and break.
- Unscrew the frost plug on the underside of the shower fittings.
  - If there is no frost plug, unscrew the shower hose.
- Drain the water tank and all other components containing water in order to avoid frost damage.
- Run the freshwater pump dry to drain out all the water.
- Make sure that no water remains in the boat under any circumstances. Leave the hatches in the cabin partially open.

7.8 Checklist: Before winter lay-up

- Wash the hull and bottom immediately after lifting the vessel out of the water.
- Wash all parts inside, also under the floorboards.
- Leave all lockers, drawers, and cabin and wardrobe doors open.
- Remove the carpets.
  - Store the carpets and cushions indoors in a dry place.
  - If this is not possible, make sure that the cushions are dry and position them on their side.
- Disconnect and service the fridge.
  - Switch off the power and disconnect the power supply.
  - Defrost the fridge.
  - Clean and dry the exterior and the interior of the fridge.
  - Empty and dry the condensate water tray.
  - Leave the door slightly ajar to enable ventilation.
  - Check the more detailed instruction in the manufacturer's manual.
- Ensure good ventilation in the boat.

© 2025 Axopar Boats

- Make sure that there is no water beneath the fuel tank. Any water present can be extracted using the suction pipe that is attached to the tank's exterior.
- Make sure that the rubber O-ring between the fuel tank inlet and the fuel tank cap is intact. Otherwise there is risk of water getting inside the fuel tank.

NOTICE If the batteries are left aboard, make sure they are fully charged, otherwise the batteries can freeze and crack.

7.9 Checklist: Before launching

1. Remove the tarpaulin in good time before launching.
2. Wash the hull with a regular shampoo and a soft brush.
3. Wax the hull, if necessary.

   Use a standard boat wax.
4. If there are small scratches on the hull or if some of the surface gelcoat has lost its shine, use a rubbing compound on these areas before polishing.
5. Paint the bottom with antifouling paint.
6. If the batteries have been removed, put them back and check the electrolyte level in the cells.

   Check the condition of the batteries.
7. Check all cables, clamps, engine mountings and other fastenings.
8. Check the steering before launching.
9. Check the instrumentation.
10. Close all water drain plugs.
11. Check that the seacocks are tight and in order, check for any frost damage.
12. Check all pipes, hoses and cocks.
13. Make a note of any frost damage.

7.10 Corrective maintenance

7.10.1 Deposits

Mild detergents and fine rubbing compounds reduce the weathering and calcium deposits accumulated on the surfaces.

NOTICE Do not apply the rubbing compound in direct sunlight.

- Use only a fine grit compound, and follow the label instructions carefully.
- For the best result, wax the surface after treating it with the rubbing compound.

© 2025 Axopar Boats

7.10.2 Scratches and nicks

Most scratches and nicks can be removed by using a rubbing compound followed by waxing.

7.10.3 Stains

Most stains can be removed by washing with a mild detergent.

- For stubborn stains, use a tine abrasive household cleanser followed by waxing to restore original luster.
- For non-water-soluble stains, such as grease, oil, and rubber heel marks, use a solvent such as acetone, rubbing alcohol, toluene or xylene, followed by a mild detergent.
    - If these solvents are not effective, try a rubbing compound or fine sanding followed by waxing.

7.10.4 Deep marks, gouges and holes

Deep marks, gouges and holes should be repaired professionally.

Gelcoats can be well repaired by professionals, and in most cases the repair will be undetectable.

NOTICE

In cases where the damage has pierced the gelcoat layer, further exposure to water or chemicals should be avoided.

Failure to observe this precaution may result in extensive and potentially costly damage to the underlying laminate structure.

© 2025 Axopar Boats

8 Environment

When handling environmentally hazardous substances such as fuel, oils, solvents, grease, bottom coats, you need to consider the following:

- Always read the instructions for each product carefully and handle the product with care.
  - Make sure that the used packaging, cans and similar items are discarded in designated collection points.
  - If you are in any doubt whether the product is hazardous or not, contact the supplier or vendor of the product.
- The backwash from boats wears down the shoreline and creates problems for other boats near you.
  - Always adjust your speed to the situation and the surroundings to avoid unnecessary backwash.
- Always drive the boat at the most economical revs possible, taking the prevailing conditions into account, to avoid unnecessary emissions and noise.
- Make sure that the is properly serviced at regular intervals so that noise and emission levels are minimized.
  - Read the manufacturer's manual carefully.
- As a boat owner you must be aware of the local environmental laws, and respect codes of good practice.
  - Never empty the septic or blackwater tank into water.
  - Familiarize yourself with the international regulations on the prevention of marine pollution (MARPOL) and comply with these regulations.
- Always investigate the source of any oil leaks as soon as possible.
- Dispose of recovered spilt oil correctly.
- Keep oil-absorbing cloths or rolls on board.
- Never dispose of overboard any oil, paint or other chemical that is potentially harmful to the environment. Sanctions are in place in most parts of the world for those who disregard this rule!

⚠ WARNING Any oil must be treated as chemical waste.

8.1 Requirements for North America

The EPA standards state that in freshwater lakes, freshwater reservoirs or other freshwater impoundments whose inlets or outlets are such as to prevent the ingress or egress by vessel traffic subject to this regulation, or in rivers not capable of navigation by interstate vessel traffic subject to this regulation, marine sanitation devices certified by the U.S. Coast Guard installed on all vessels shall be designed and operated to prevent the overboard discharge of sewage, treated or untreated, or of any waste derived from sewage.

The EPA standards further state that this shall not be construed to prohibit the carriage of Coast Guard-certified flow-through treatment devices which have been secured so as to prevent such discharges. They also state that waters where a Coast Guard-certified marine sanitation device permitting discharge is allowed include coastal waters and estuaries, the Great Lakes and interconnected waterways,

© 2025 Axopar Boats

freshwater lakes and impoundments accessible through locks, and other flowing waters that are navigable interstate by vessels subject to this regulation (40 CFR 140.3).

© 2025 Axopar Boats

9 Appendix I: Checklists

9.1 Checklist: Fire in the engine

- Stop the engine.
- Steer the boat up against the wind, if possible.
- Make sure all passengers have life jackets.
- If necessary:
  - Evacuate the passengers.
  - Call for sea rescue.
- Extinguish the fire.
- Wait until fully certain that the fire has been extinguished before opening the engine cover.

  Carefully open the engine cover and be prepared to use the handheld fire extinguisher if necessary for post-fire extinguishing.
- Put out possible smoldering fires with water.

9.2 Checklist: After fire

- Open doors and windows for better ventilation.
- Inspect the boat and its equipment, and repair any damages.
- Contact local authorities, if needed.
- Make sure that the fire extinguishing equipment is refilled or replaced after use.

9.3 Checklist: Regular inspection before leaving harbor

Safety

Make sure that:

- All the people onboard have life jackets.
- The wind and wave conditions do not exceed the design category of the boat.
- The dead man's switch is switched to driver.
- There is a fire extinguisher (or several) onboard and their approval/inspection date has not expired.
- The needed ropes and anchor are onboard.

Draining and tightness

Check that:

- There is no water in the bilge.
- All the bilge pumps are functional.

© 2025 Axopar Boats

- The bilge has no signs of fuel or oil leaks.
- All deck hatches are tightly closed.

Electrical and engine

Check that:

- All the fuses are intact.
- The main switches are switched on.
- The batteries have enough power.
- The engine works properly.
- The engine cooling water flows as expected.
- The fuel level is sufficient.

⚠ WARNING The specified tank capacity is not necessarily fully available, depending on the trim and load on board. The tank must always be kept at least 20% full.

9.4 Checklist: After using the boat

Make sure that:

- The main switches are switched off.
- The septic tank discharge valve is closed.
- There is no water in the bilge.
- The bilge pumps are functional.
- The deck draining works properly and all the draining valves are open.
- All deck hatches, roof canvas and doors are tightly closed.

9.5 Checklist: Boat handling before leaving harbor

For safe navigation under all weather conditions, proper sound signaling equipment in compliance with regulations (COLREG, 1972) must be carried on board. Make sure that the sound signaling equipment on the boat is compliant with these regulations.

© 2025 Axopar Boats

⚠ CAUTION According to national regulations in some countries, it is a legal requirement to wear a life vest at all times.

- Check that the boat and its equipment are in seaworthy condition.
- Always listen to long-term weather forecasts when planning longer trips.
- Always make sure there is enough fuel and freshwater in the tanks.
- Check that all items on board are properly stowed and adequately secured to manage rough sea and wind conditions.
- Make sure that the swim ladder is raised out of the water before moving off.
- Make sure that the steering is correctly positioned before starting.
- All persons on board must wear an appropriate life vest when on deck.

9.6 Checklist: Before anchoring

1. Check the chart to see if anchoring is permitted in the area.
2. Listen to the weather forecast for the area and take note of the expected wind conditions.
3. Switch on the echo sounder.
4. Study the seabed conditions and make sure that there is good holding ground.
5. Check that the safety chain has been released from the anchor.
6. Wait until you have reached the intended anchoring point before lowering the anchor.
7. Let out the anchor line equal to at least three times the depth of the water.
8. Put the engine in astern to check that the anchor has taken hold (only when bow anchoring).
9. Note your position on the GPS. Regularly check that the boat has not moved from its position.
10. Set the echo sounder to “Anchor Watch”.

⚠ WARNING Always fix the anchor in such a way that it is securely fastened onto the boat. An anchor that falls off when under way may cause serious damage to the boat and mortal danger to the crew.

9.7 Checklist: Before winter lay-up

- Wash the hull and bottom immediately after lifting the vessel out of the water.
- Wash all parts inside, also under the floorboards.
- Leave all lockers, drawers, and cabin and wardrobe doors open.
- Remove the carpets.
  - Store the carpets and cushions indoors in a dry place.
  - If this is not possible, make sure that the cushions are dry and position them on their side.
- Disconnect and service the fridge.
  - Switch off the power and disconnect the power supply.
  - Defrost the fridge.

© 2025 Axopar Boats

  - Clean and dry the exterior and the interior of the fridge.
  - Empty and dry the condensate water tray.
  - Leave the door slightly ajar to enable ventilation.
  - Check the more detailed instruction in the manufacturer's manual.
- Ensure good ventilation in the boat.
- Make sure that there is no water beneath the fuel tank. Any water present can be extracted using the suction pipe that is attached to the tank's exterior.
- Make sure that the rubber O-ring between the fuel tank inlet and the fuel tank cap is intact. Otherwise there is risk of water getting inside the fuel tank.

NOTICE If the batteries are left aboard, make sure they are fully charged, otherwise the batteries can freeze and crack.

9.8 Checklist: Before launching

1. Remove the tarpaulin in good time before launching.
2. Wash the hull with a regular shampoo and a soft brush.
3. Wax the hull, if necessary.

   Use a standard boat wax.
4. If there are small scratches on the hull or if some of the surface gelcoat has lost its shine, use a rubbing compound on these areas before polishing.
5. Paint the bottom with antifouling paint.
6. If the batteries have been removed, put them back and check the electrolyte level in the cells.

   Check the condition of the batteries.
7. Check all cables, clamps, engine mountings and other fastenings.
8. Check the steering before launching.
9. Check the instrumentation.
10. Close all water drain plugs.
11. Check that the seacocks are tight and in order, check for any frost damage.
12. Check all pipes, hoses and cocks.
13. Make a note of any frost damage.

9.9 Maintenance log

Regular maintenance tasks are presented in the following table. If you feel confident enough, you can perform all these tasks yourself. If not, please contact your local Axopar dealer for help.

Depending on vessel model and components, every task might not be relevant.

© 2025 Axopar Boats

MAINTENANCE LOG	Frequency				
Task to be performed	Every trip	Every month	Every 3 months	Every 6 months	Annually
Bilge system - Remove, clean and inspect bilge pump, check valve and its surroundings for damage or debris that may reduce the performance of the pump	●				
Waste system - Replace the no-smell carbon filters					●
Waste system - Run the macerator pump					●
Heating system - Run the heater for 10 minutes		●			
Air conditioning system - Clean air filter, seawater strainer and check the system for leaks		●			
Water system - Clean inline filter			●		
Inspect Zinc anodes - Replace all zinc anodes if 50 % has been eaten up				●	
Fire extinguisher inspection					●
CO alarm - Push test button for 1 sec			●		
Smoke alarm - Push test button for 3 sec			●		
Seacocks - Turn handle Open and Close					●
Batteries - Charge state, terminals securely attached and free from corrosion					●
LPG system - Check condition of LPG lines, connectors and LPG shut off valve					●
Fuel system - Check condition of fuel lines, connectors and fuel shutoff valves					●
Inspect fuel tank compartment bilge for water				●	
Livewell pump - Check condition of hoses and connectors			●		
Gelcoat waxing				●	
Clean hull & deck from saltwater	●				
Keep bilge dry and clean	●				
Boat covers - Clean upholstery covers and sunroof cover				●	

© 2025 Axopar Boats

10 Appendix II: Fuel system

© 2025 Axopar Boats

10.1 Fuel system: USA (EPA)

© 2025 Axopar Boats

Insulation foam on tank

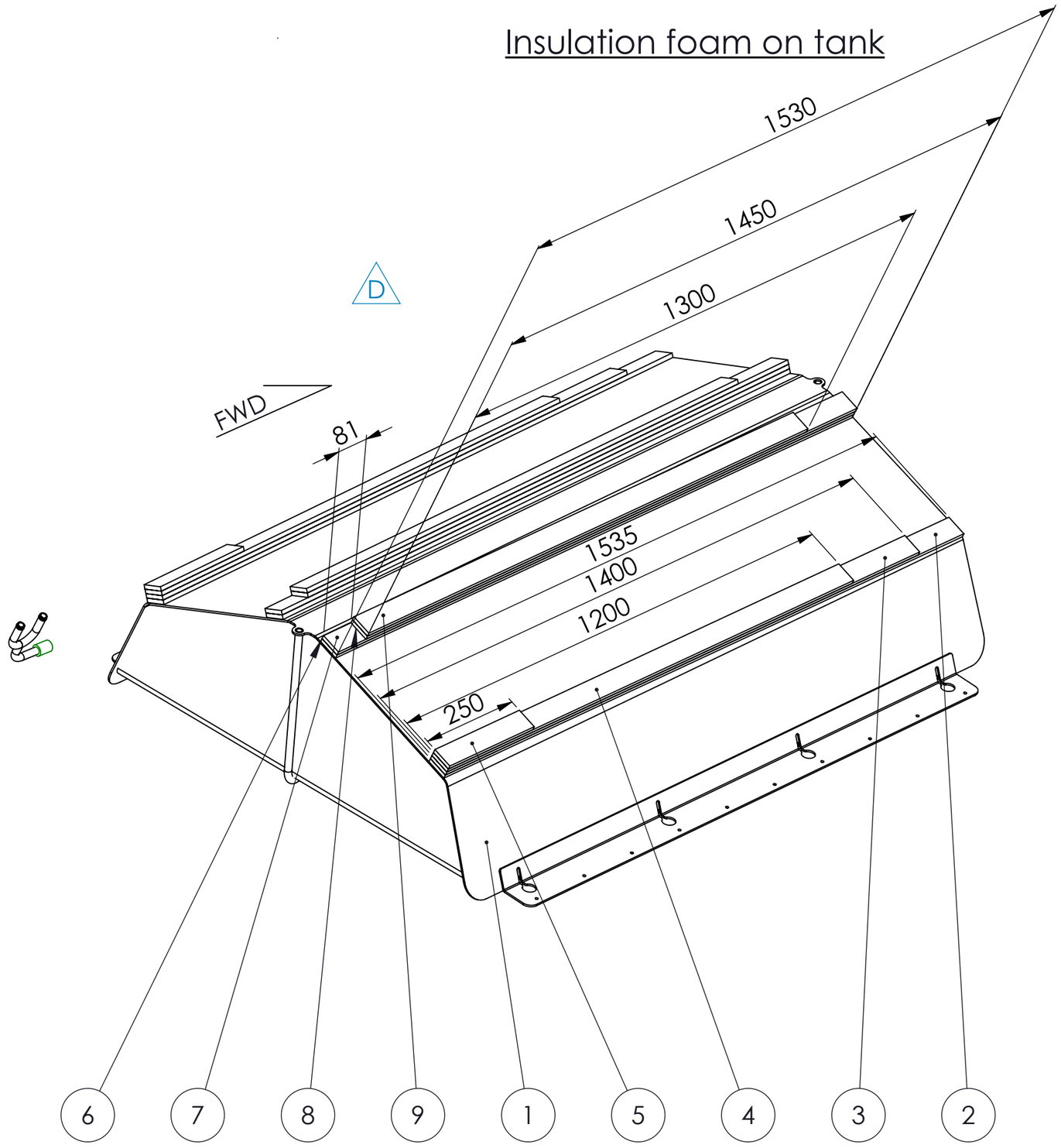

REVISIONS			
REV.	DESCRIPTION	DATE	APPROVED
A	Removed fuel filter and 2x fittings from structure	19.10.2023.	AJu
B	Changed fuel supply hoses	7.12.2023.	
C	Added inline surge protector, check valve and fuel filter kit	11.3.2024	
D	Updated according to production	2.8.2024.	
E	Y connector added	21.1.2025.	

Total length of AXO1001170: 20,39m ~ 21m

PART NO.	ITEM	DESCRIPTION	MATERIAL	SIZE, CAPACITY	LENGTH (mm)	QTY.
1	AXO8000383, A	FUEL TANK	ALUMINIUM	400 LITER	-	1
2	AXO1001170, A	INSULATION	FOAM	2000x50x10	1535	2
3	AXO1001170, A	INSULATION	FOAM	2000x50x10	1400	2
4	AXO1001170, A	INSULATION	FOAM	2000x50x10	1200	2
5	AXO1001170, A	INSULATION	FOAM	2000x50x10	250	2
6	AXO1001170, A	INSULATION	FOAM	2000x50x10	1530	2
7	AXO1001170, A	INSULATION	FOAM	2000x50x10	1530	2
8	AXO1001170, A	INSULATION	FOAM	2000x50x10	1450	2
9	AXO1001170, A	INSULATION	FOAM	2000x50x10	1300	2

This document and the information contained in it is proprietary and confidential information of Axopar Boats Oy. Neither this document nor any of the information contained herein may be reproduced, disclosed to others, or used for any purpose other than for the purpose it has been provided without the prior written permission of Axopar Boats Oy.

AXOPAR

BOAT MODEL	MODEL YEAR	ITEM	REV
AX28	2023	AXO9001503	E
		DRAWING DRW01195	REV E

	BY	DATE	DESCRIPTION	SCALE	PAGE
CREATED	ANTMIH	01.06.2023	FUEL SYSTEM	1:10	1 / 4
CHECKED	L.C.	01.06.2023	TECHNICAL DESCRIPTION		
ACCEPTED	VILVUO	12.09.2023	Manufacturing specification		

PULS YACHT DESIGN

BOM

REVISIONS			
REV.	DESCRIPTION	DATE	APPROVED
A	Removed fuel filler and 2x fittings from structure	19.10.2023	AJu
B	Changed fuel supply hoses	7.12.2023	
C	Added fuel filter kit and inline surge protector	11.3.2024	
D	Fuel supply and protective hoses path updated	2.8.2024	
E	Y connector added	21.1.2025.	

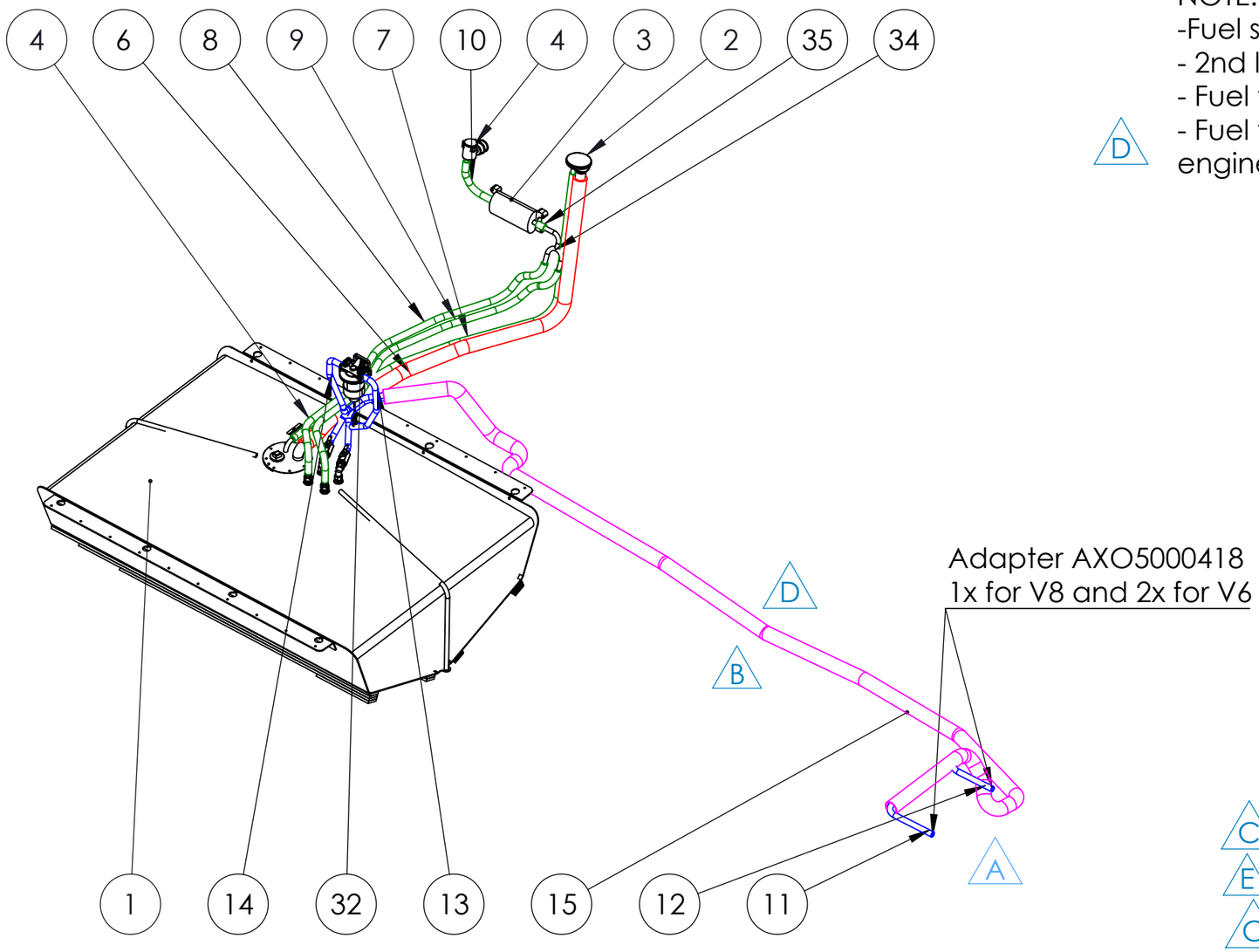

NOTE:
-Fuel supply:
- 2nd line OPTION for 2 engines
- Fuel tank 2nd line connector AXO8000452
- Fuel filter kit OPTION (AXO5000407) for 1xV10 engine + fuel tank 2nd line 2x connector AXO8000452

D

PART NO.	ITEM	DESCRIPTION	MATERIAL	SIZE, CAPACITY	QTY.
1	AXO8000383, A	FUEL TANK	ALUMINIUM	400 LITER	1
2	AXO8000324, A	DECK FILLER	BRONZE, CHROMED CAP, PLASTIC BODY	ø38MM / ø16MM	1
3	AXO8000083, A	CARBON CANISTER	PLASTIC	ø16MM/ ø16MM (5/8" - 5/8")	1
4	AXO8000082, A	TANK VENTILATOR		ø16MM, (5/8")	1
5	AXO8000081, A	CHECK VALVE	PLASTIC	ø38MM, (1-1/2")	1
6	AXO8000040, A	FUEL HOSE	NBR RUBBER	ø38	1
7	AXO8000041, A	FUEL HOSE	NBR RUBBER	ø16	1
8	AXO8000041, A	FUEL HOSE	NBR RUBBER	ø16	1
9	AXO8000041, A	FUEL HOSE	NBR RUBBER	ø16	1
10	AXO8000041, A	FUEL HOSE	NBR RUBBER	ø16	1
11	AXO8000418, A	FUEL HOSE		ø12.7	1
12	AXO8000418, A	FUEL HOSE		ø12.7	1
13	AXO8000418, A	FUEL HOSE		ø12.7	1
14	AXO8000418, A	FUEL HOSE		ø12.7	1
15	AXO0000456, A	PROTECTIVE HOSE	PLASTIC	ø54 / ø47	1
32	AXO5000407, A	FUEL FILTER KIT			1
33	AXO8000122, A	IN-LINE SURGE PROTECTOR	PLASTIC	ø16	1
34	AXO8000522, A	Y-CONNECTOR			1
35	AXO8000041, A	FUEL HOSE	NBR RUBBER	ø16	1

C
E
C

HOSES PLAN				
DESCRIPTION	ITEM	SIZE, m	LENGTH, m	COLOR
Fuel fill	AXO8000040	Ø38	1,8	
Fuel supply (single engine)	AXO8000418	Ø12	8	
Fuel supply (double engine)	AXO8000418	Ø12	13	
Vent	AXO8000041	Ø16	5,5	
Protective	AXO0000270	Ø46	4,3	

D

This document and the information contained in it is proprietary and confidential information of Axopar Boats Oy. Neither this document nor any of the information contained herein may be reproduced, disclosed to others, or used for any purpose other than for the purpose it has been provided without the prior written permission of Axopar Boats Oy.

AXOPAR

BOAT MODEL	MODEL YEAR	ITEM	REV
AX28	2023	AXO9001503	E
		DRAWING DRW01195	REV E

	BY	DATE	DESCRIPTION	SCALE	PAGE
CREATED	ANTMIH	01.06.2023	FUEL SYSTEM	1:20	2 / 4
CHECKED	L.C.	01.06.2023	TECHNICAL DESCRIPTION		
ACCEPTED	VILVUO	12.09.2023	Manufacturing specification		

PULS YACHT DESIGN

Positions

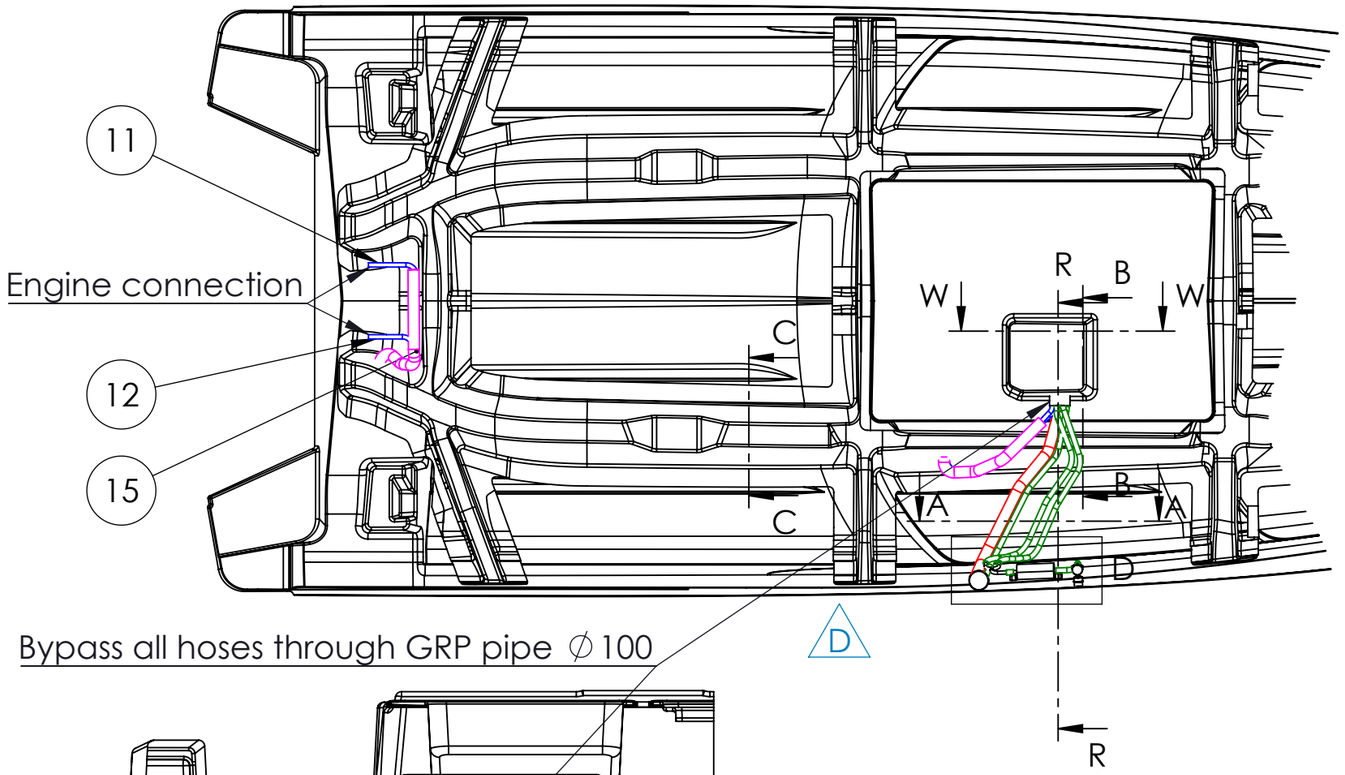

Bypass all hoses through GRP pipe ∅100

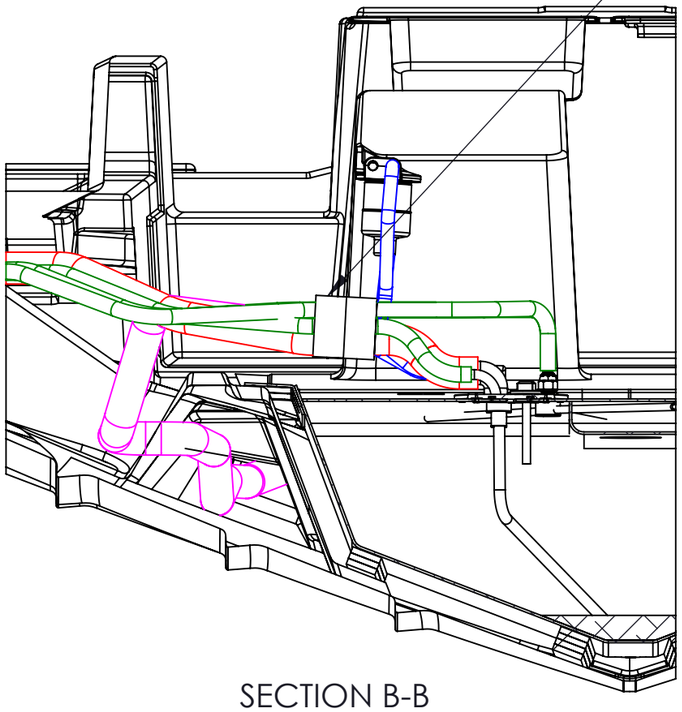

SECTION B-B
SCALE 1 : 10

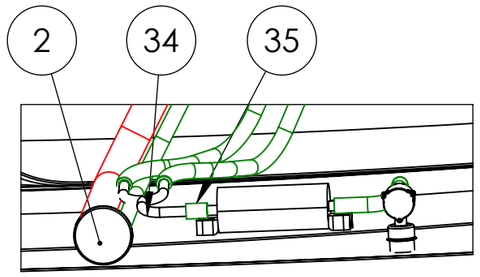

DETAIL D
SCALE 1 : 10

REVISIONS			
REV.	DESCRIPTION	DATE	APPROVED
A	Removed fuel filter and 2x fittings from structure	19.10.2023.	AJu
B	Changed fuel supply hoses	7.12.2023.	
D	Fuel supply and protective hoses path updated	2.8.2024.	
E	Y connector added	21.1.2025.	

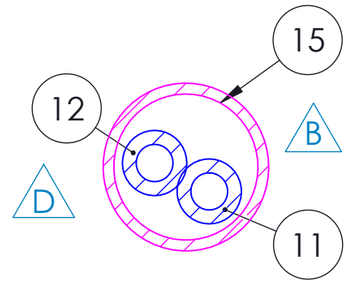

Fuel line in protective hose
SECTION C-C
SCALE 1 : 2

A NOTE:
-Fuel supply:
- 2nd line OPTION for 2 engines
- Fuel tank 2nd line connector AXO8000452
D - Fuel filter kit OPTION (AXO5000407) for 1xV10 engine + fuel tank 2nd line 2x connector AXO8000452

HOSES PLAN				
DESCRIPTION	ITEM	SIZE, m	LENGTH, m	COLOR
Fuel fill	AXO8000040	∅38	1,8	
Fuel supply (single engine)	AXO8000418	∅12	8	
Fuel supply (double engine)	AXO8000418	∅12	13	
Vent	AXO8000041	∅16	5,5	
Protective	AXO0000270	∅46	4,3	

This document and the information contained in it is proprietary and confidential information of Axopar Boats Oy. Neither this document nor any of the information contained herein may be reproduced, disclosed to others, or used for any purpose other than for the purpose it has been provided without the prior written permission of Axopar Boats Oy.

AXOPAR

BOAT MODEL AX28	MODEL YEAR 2023	ITEM AXO9001503	REV E
		DRAWING DRW01195	REV E

	BY	DATE	DESCRIPTION	SCALE	PAGE
CREATED	ANTMIH	01.06.2023	FUEL SYSTEM	1:30	3 / 4
CHECKED	L.C.	01.06.2023	TECHNICAL DESCRIPTION		
ACCEPTED	VILVUO	12.09.2023	Manufacturing specification		

PULS YACHT DESIGN

REVISIONS			
REV.	DESCRIPTION	DATE	APPROVED
C	Added sections R, M and W		
E	Y connector added	21.1.2025 11.3.2024	

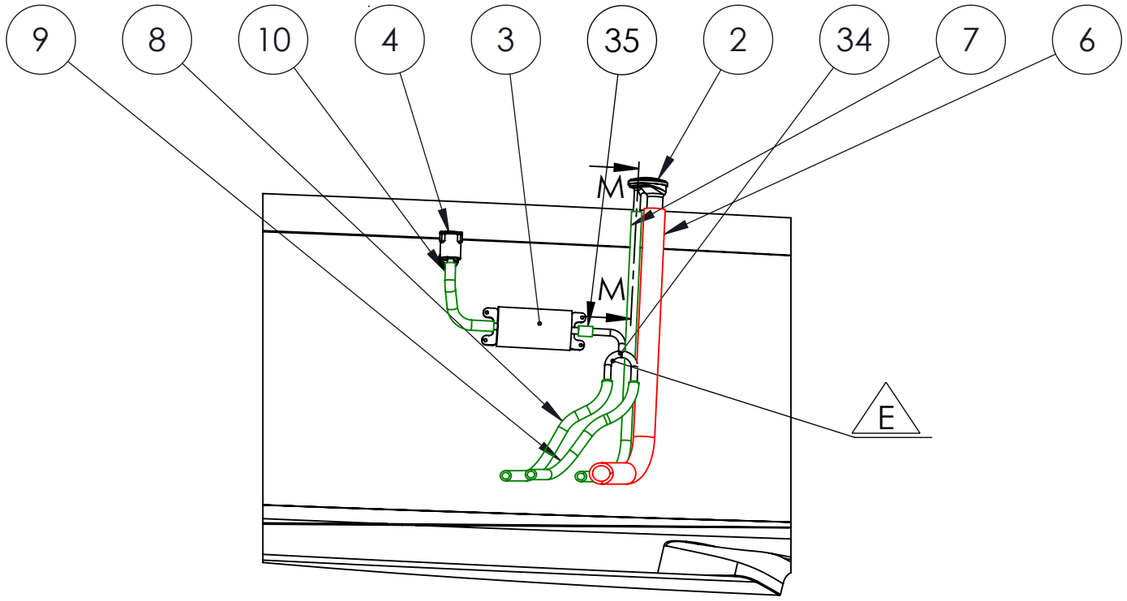

SECTION A-A
SCALE 1 : 15

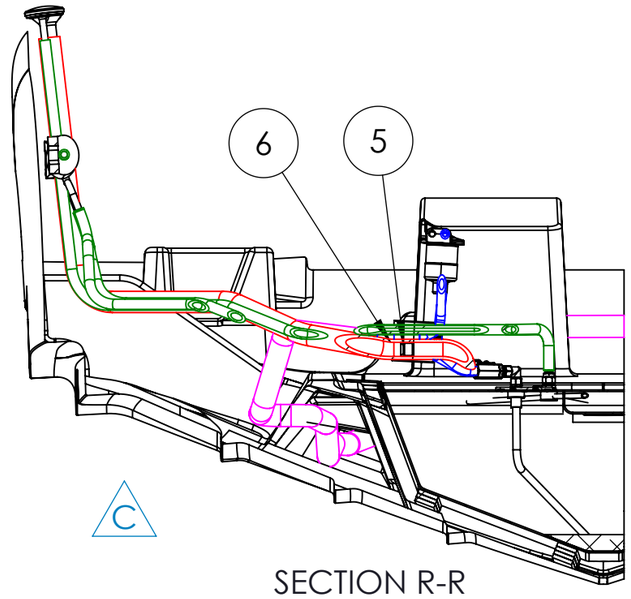

SECTION R-R
Check valve
SCALE 1 : 15

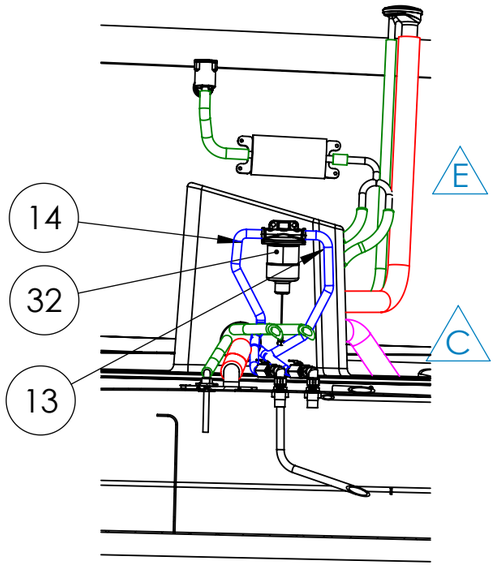

SECTION W-W
Fuel filter position
SCALE 1 : 15

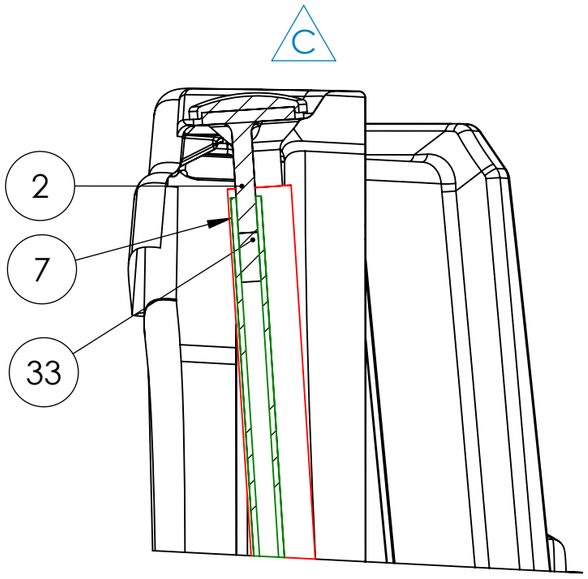

SECTION M-M
SCALE 1 : 5

NOTE :
-Check valve (AXO8000081) is installed inside fuel fill line, near tank connection, aprox 200 mm.
- Fuel filter kit OPTION (AXO5000407) for 1x V10 engine

This document and the information contained in it is proprietary and confidential information of Axopar Boats Oy. Neither this document nor any of the information contained herein may be reproduced, disclosed to others, or used for any purpose other than for the purpose it has been provided without the prior written permission of Axopar Boats Oy.

AXOPAR

BOAT MODEL AX28	MODEL YEAR 2023	ITEM AXO9001503	REV E
		DRAWING DRW01195	REV E

	BY	DATE	DESCRIPTION	SCALE	PAGE
CREATED	ANTMIH	01.06.2023	FUEL SYSTEM	1:30	4 / 4
CHECKED	L.C.	01.06.2023	TECHNICAL DESCRIPTION		
ACCEPTED	VILVUO	12.09.2023	Manufacturing specification		

PULS YACHT DESIGN

11 Appendix III: Electrical diagrams

© 2025 Axopar Boats

Axopar 28 Mk3 230Vac SYSTEM LAYOUT

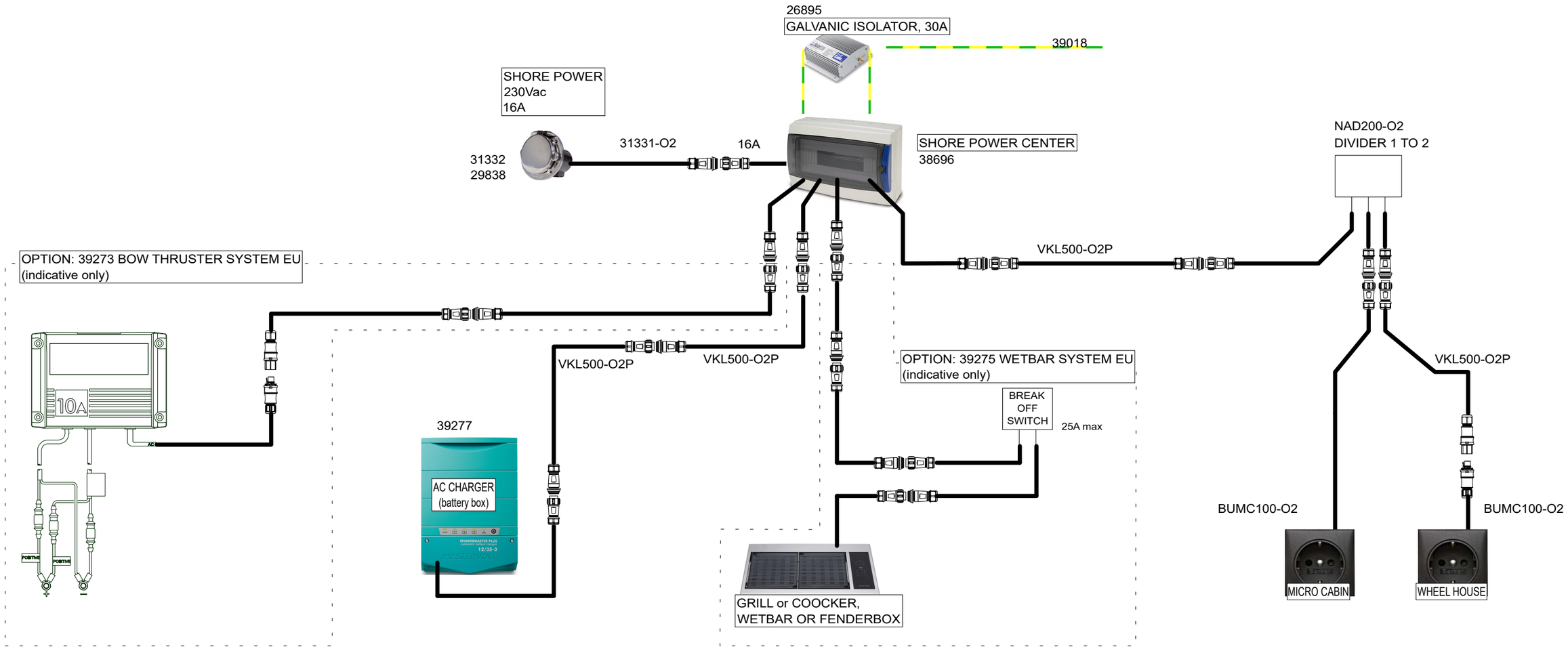

BASIC COMPONENTS
31332 - Shore Power Cable 16A/250V 25m - Ratio Electric 2822
29838 - SHORE POWER MLC ADAPTER 200mm - 2,5mm2 -
31331-O2 - Deck Contact 16A/250V S.S. IP56 - Ratio Electric MP16-10

26895 - Galvanic Isolator 30A, 120/240 VAC - ProSafe FS30
39018 - AC GROUNDING CABLE EURO - 1000CM 6mm2 WITH TUBE

38696 - Axopar 28 SHORE POWER CENTER EU -

4pcs VKL500-O2P - CONNECTION CABLE 500CM IP68 1,5 mm2 WITH TUBE -
39277 ChargeMaster Plus 12/35-3 with O2
NAD200-O2 - DIVIDER -
2pcs BUMC100-O2 - WALL SOCKET, single pos. flush mounting - Berker, matt chrome

13.2.2024	PF	B2: Removed 29189 (from inlet) & VKL100-O2P (from cabin socket)	Date 5.5.2023	NAVIX.	Axopar		38694	
			Drawing by PF		Boat	Sub-product code	Product code	Project ID
			Sheet rev. 2		28 MK3	SHORE POWER SYSTEM EU	HL	1/ 4
Date of modification	Modified by	Description	Project rev. B	Copyright by	Boat model	Title	Loc	Sheet

Axopar 28 Mk3 120Vac SYSTEM LAYOUT

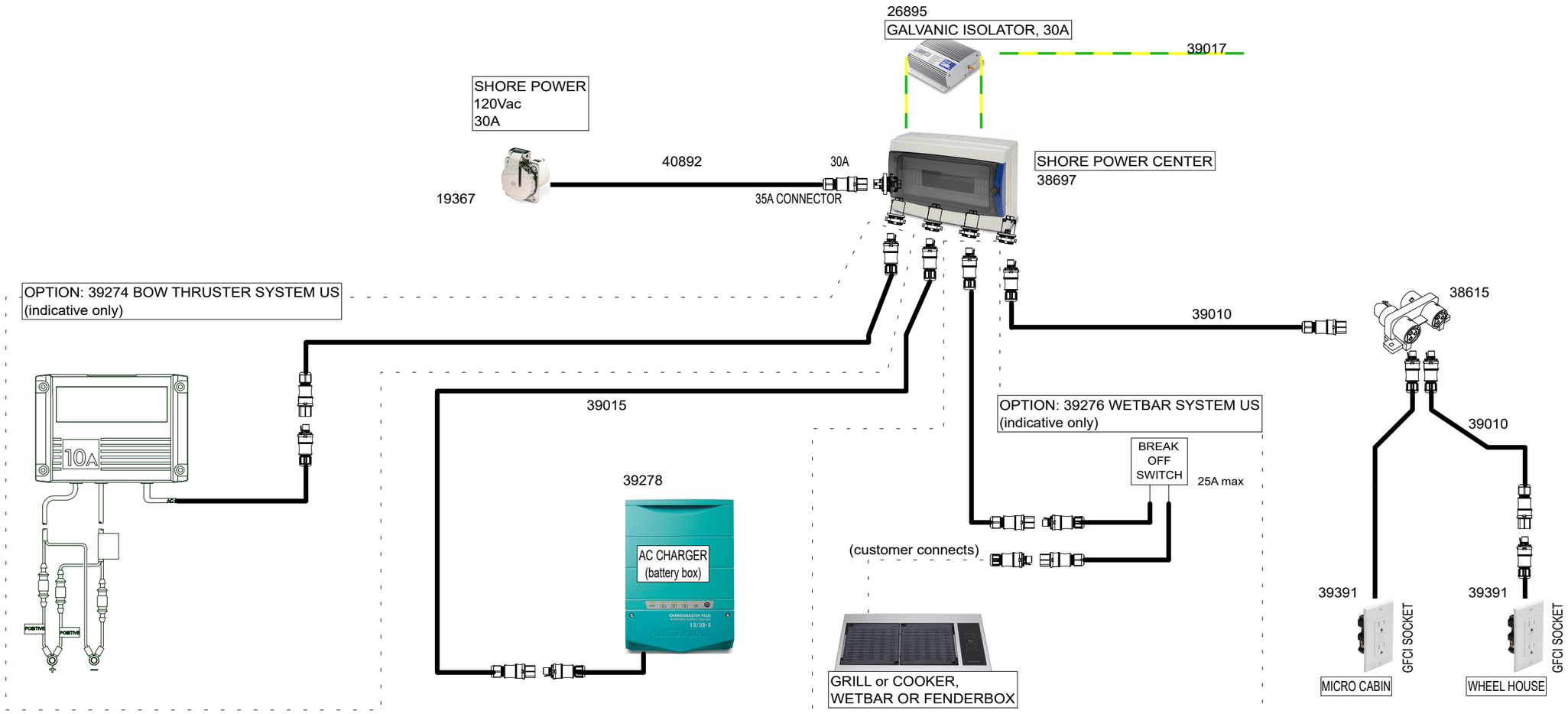

STANDARD COMPONENTS - parts list
19367 - Shore Power Cable 30A/125V 15m Yellow - Marinco 199119
40892 - DECK CONTACT MARINCO US PHOENIX - 70cm AWG 10 WITH TUBE

26895 - Galvanic Isolator 30A, 120/240 VAC - ProSafe FS30
39017 - AC GROUNDING CABLE US - 1000cm AWG 10 WITH TUBE

38697 - Axopar 28 SHORE POWER CENTER US -

39015 - 10m RST CONNECTION CABLE, AWG14 - USA -
39278 ChargeMaster Plus 12/35-3 with RST

2pcs 39010 - 5m RST CONNECTION CABLE, AWG14 - USA -
38615 - Distribution block 1I / 3O, parallel connection - Wieland 96.030.0153.1
2pcs 39391 GFCI RECEP. NEMA 5-15R, White, RST20 - USA A

13.2.2024	PF	B2: 2005055; Replaced 39021->40892, removed 39006	Date	5.5.2023	NAVIX.	Boat	Sub-product code	38695 Product code	Project ID
			Drawing by	PF					
			Sheet rev.	2		Boat model	SHORE POWER SYSTEM US Title	HL Loc	1/ 3 Sheet
Date of modification	Modified by	Description	Project rev.	B	Copyright by				

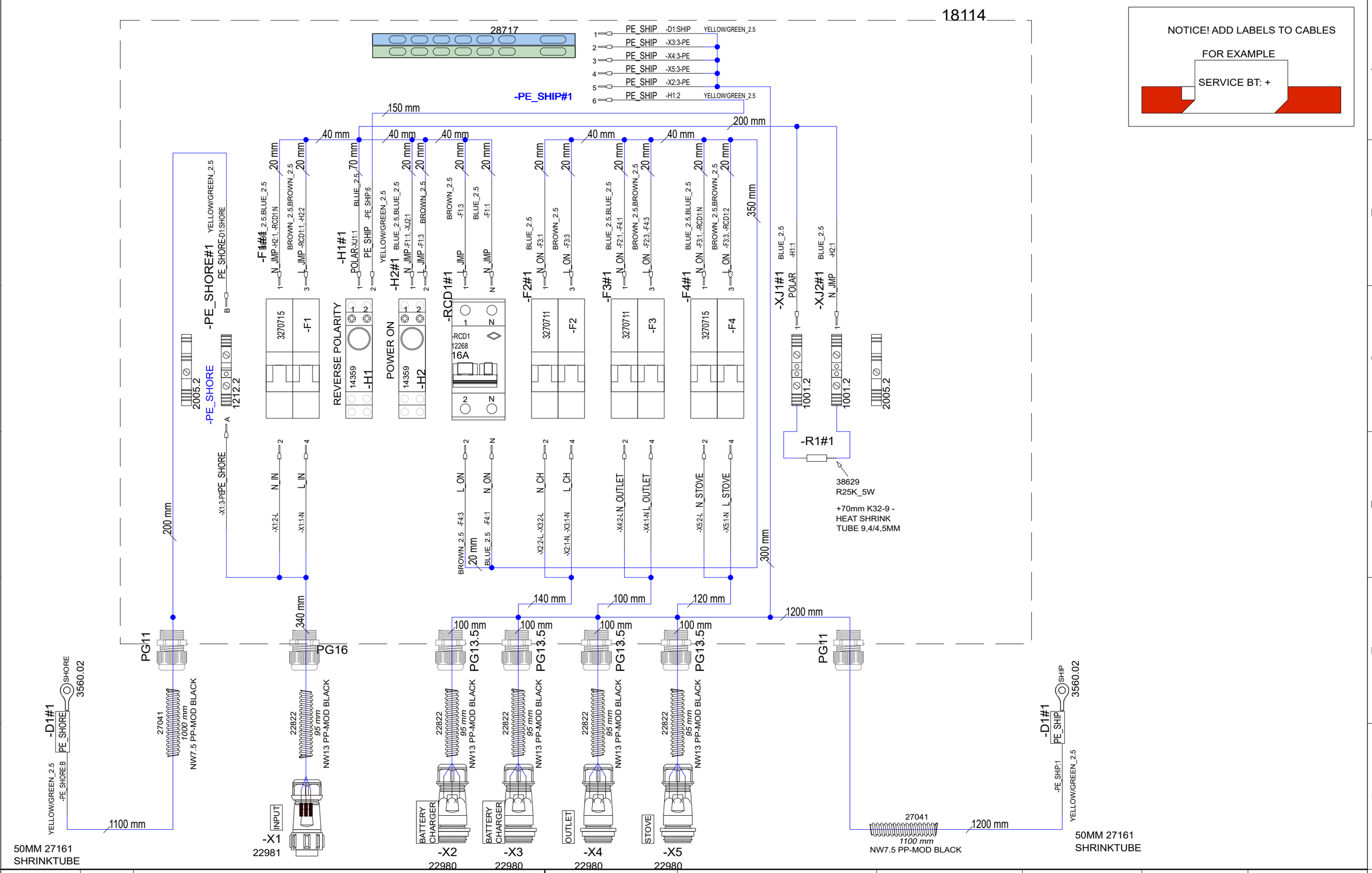

8.12.2023	PF	A2: 2004976; Layout corrected, pe ship moved	Date	11.4.2023	NAVIX.	Axopar Boat		38696 Product code	Project ID
19.2.2024	PF	B3: 2005055; PE length changes	Drawing by	PF		28 Boat model	SHORE POWER CENTER EU Title	HL Loc	2 / 4 Sheet
			Sheet rev.	3					
Date of modification	Modified by	Description	Project rev.	B	Copyright by		Sub-product code		

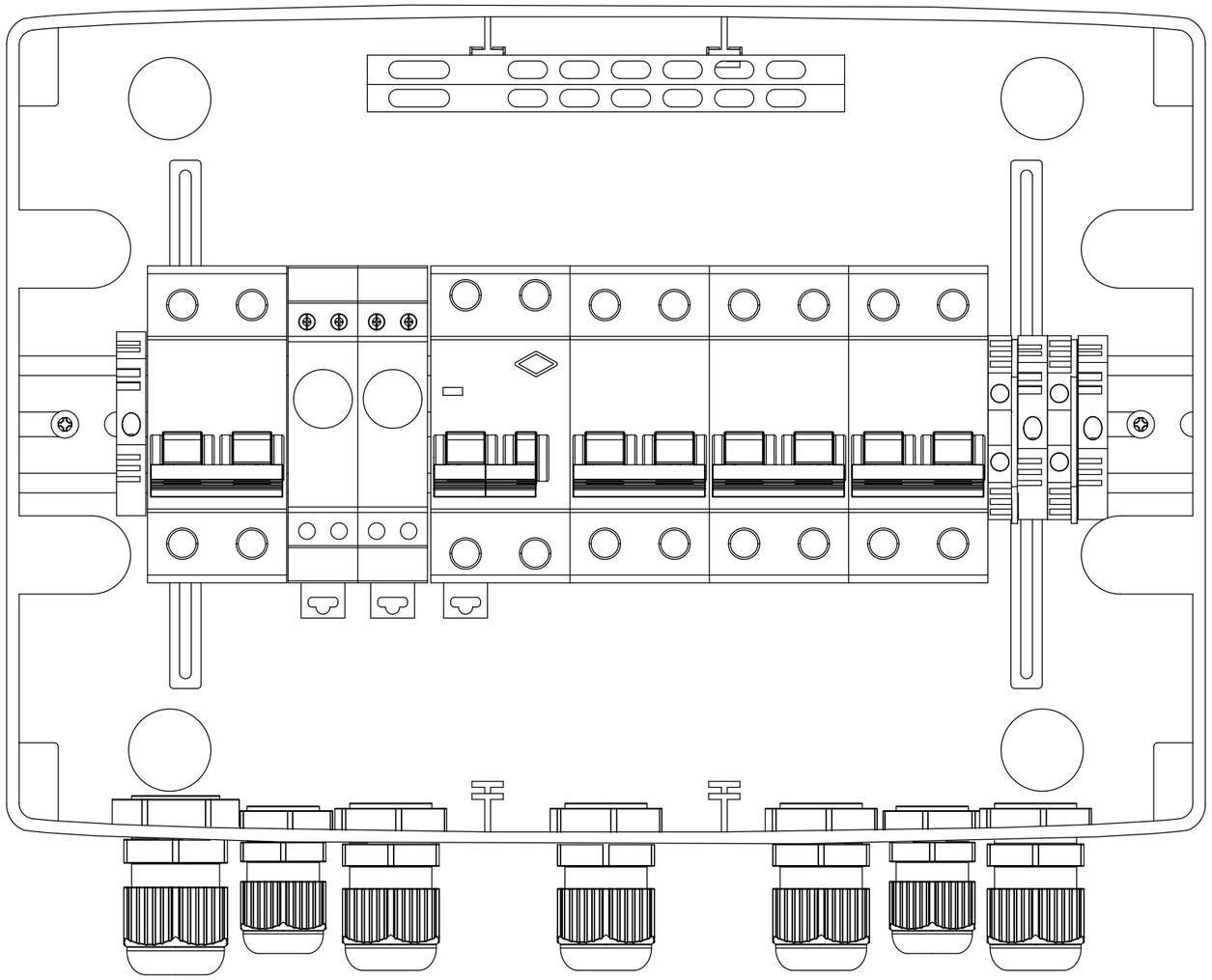

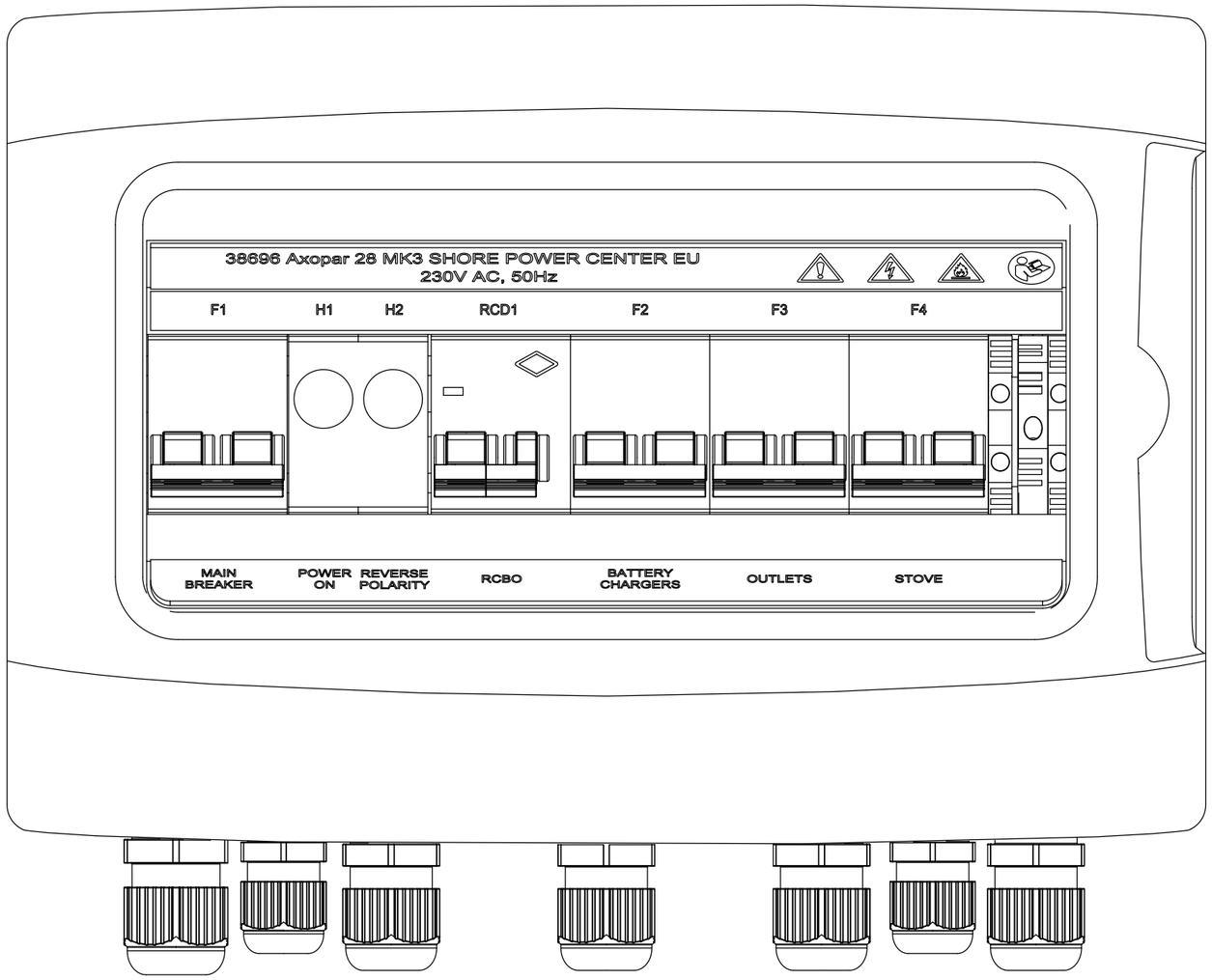

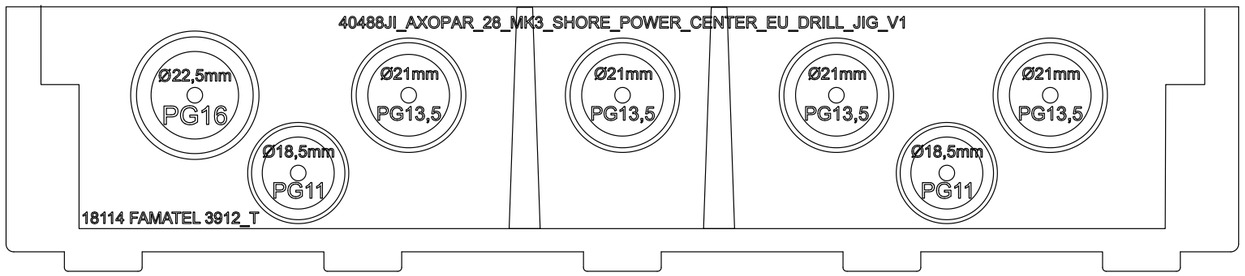

40487_AXOPAR_28_MK3_SHORE_POWER_CENTER_EU_LABEL_SET_V1

Label 1

38696 Axopar 28 MK3 SHORE POWER CENTER EU
230V AC, 50Hz

Label 2

F1 H1 H2 RCD1 F2 F3 F4

Label 3

MAIN BREAKER | POWER ON | REVERSE POLARITY | RCBO | BATTERY CHARGERS | OUTLETS | STOVE

DRILL HOLES WITH 39478JI_V1 AND 40488JI_V1 AS GUIDE

Date of modification	Modified by	Description
8.12.2023	PF	A2: 2004976; Layout corrected, pe ship moved
19.2.2024	PF	B3: 2005055; PE length changes

Date	11.4.2023
Drawing by	PF
Sheet rev.	3
Project rev.	B

Copyright by

Axopar Boat	Sub-product code	38696 Product code	Project ID
28 Boat model	SHORE POWER CENTER EU Title	HL Loc	3 / 4 Sheet

SPC TARKASTUSPÖYTÄKIRJA
SPC INSPECTION SHEET

TUOTE TARRA /
PRODUCT LABEL

* PPKKVV-JÄRJESTYSNUMERO / DDMMYY-RUNNING NUMBER (Esim. 11. maaliskuuta 2013 tehty tuote on sarjanumeroltaan 110313-01, seuraava on 110313-02 jne.)

SARJANUMERO* / SERIAL NUMBER*						
JOHDOT KIINNI OIKEIN / CORRECT CONNECTIONS						
MAADOITUS TULEVAT JA LÄHTEVÄT / GROUND CONNECTION IN AND OUT						
VVS JA TOTSIT I-ASENNOSSA / RCBO AND CIRCUIT BREAKERS IN I-POSITION						
ERISTYSVASTUS (mA) max lukema ** / ISOLATION RESISTOR (mA) max **						
MAAPIIRI 10A (Ohm) max lukema ** / GROUND CIRCUIT 10A (Ohm) max **						
TOIMINNALLINEN JA VVS TESTAUS / FUNCTIONAL AND RCBO TEST						
SARJANUMERO TARRA / SERIAL NUMBER STICKER						
PVM / DATE						
TESTASI / TESTED BY						

Tehty CENELEC EN 50106 mukaan / Made according to CENELEC EN 50106

**ERISTYSVASTUS JA MAAPIIRI TESTATTAVA JOKAISEEN SISÄÄNTULOON JA ULOSMENOON / ISOLATION RESISTOR AND GROUND CIRCUIT SHOULD BE TESTED FOR EVERY IN AND OUT

RAJA-ARVOT / LIMITS:

ERISTYSVASTUS / ISOLATING RESISTOR 1000V = <20mA

MAAPIIRI / GROUND CIRCUIT 10A = <0,2 Ohm

Date of modification	Modified by	Description
8.12.2023	PF	A2: 2004976; Layout corrected, pe ship moved
19.2.2024	PF	B3: 2005055; PE length changes

Date	27.4.2023
Drawing by	PF
Sheet rev.	3
Project rev.	B

Copyright by

Axopar Boat	Sub-product code	38696 Product code	Project ID
28 Boat model	SHORE POWER CENTER EU Title	HL Loc	4 / 4 Sheet

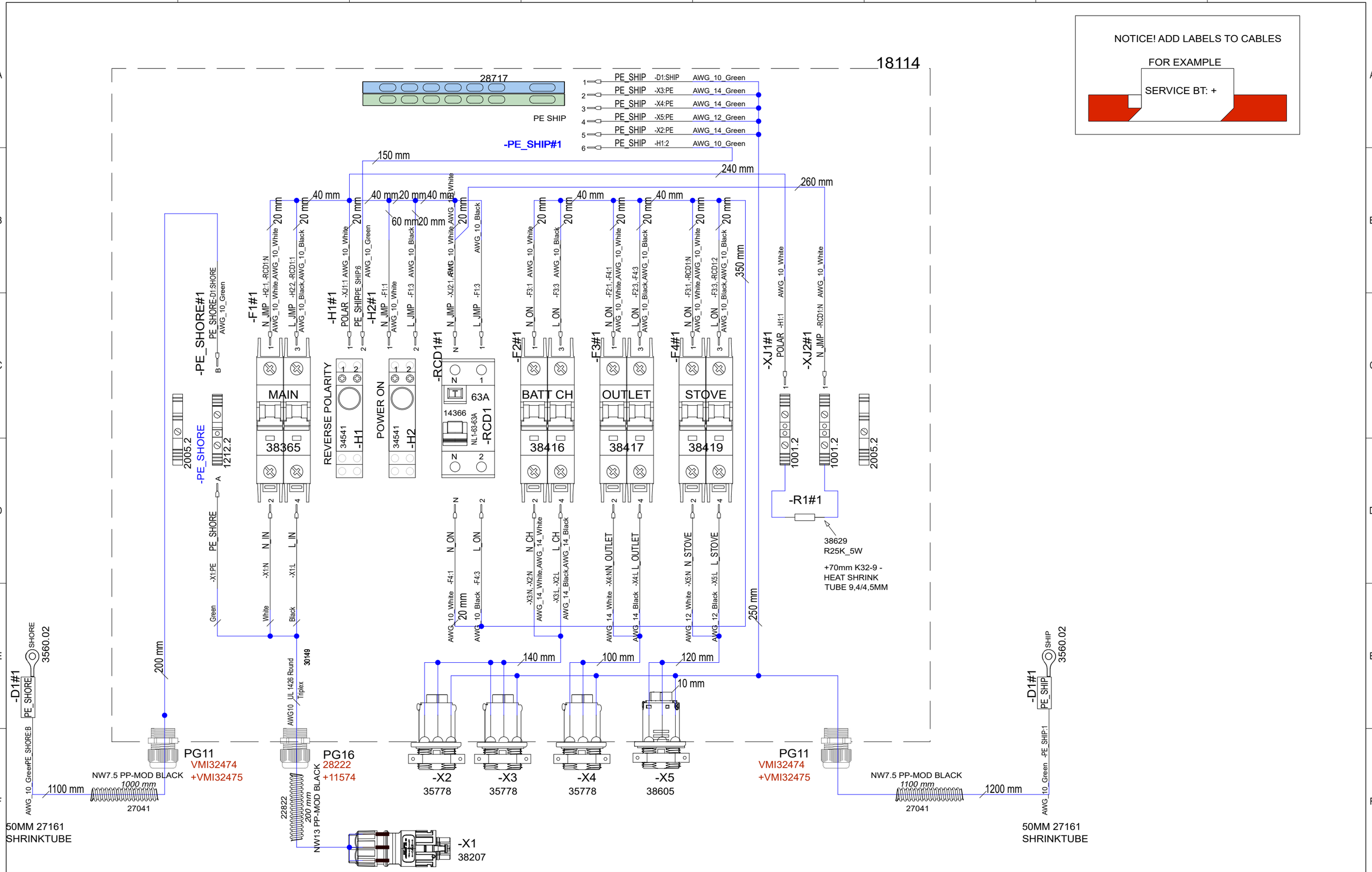

8.12.2023	PF	A2: 2004976; Layout corrected, X1 -> flange model, pe ship moved	Date 11.4.2023	NAVIX.	Axopar		
19.2.2024	PF	B3: 2005055; PE length changes	Drawing by PF		Boat	Sub-product code	38697 Product code	Project ID
15.4.2024	PF	B4 2005137; X1 connector type, RCD1 38366->14366	Sheet rev. 4		28	SHORE POWER CENTER US	HL	2 / 4
Date of modification	Modified by	Description	Project rev. B	Copyright by	Boat model	Title	Loc	Sheet

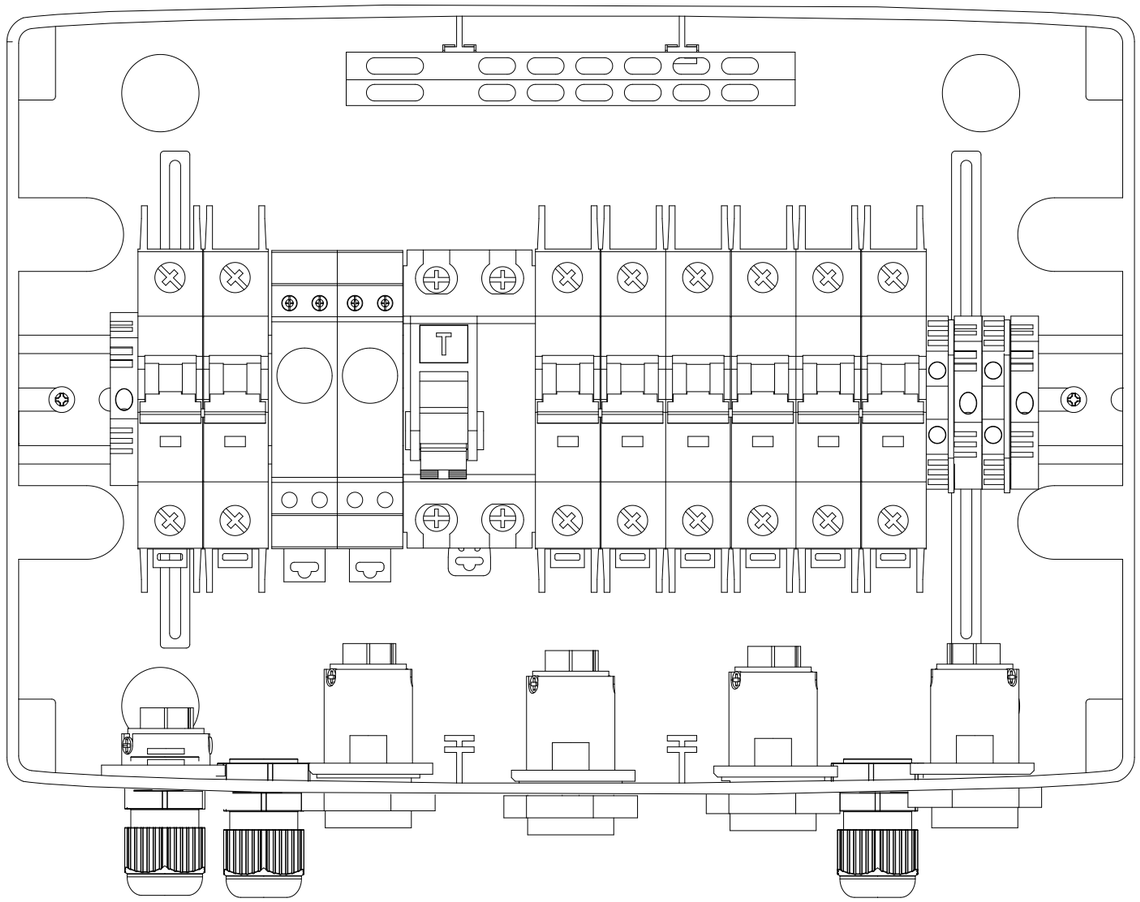

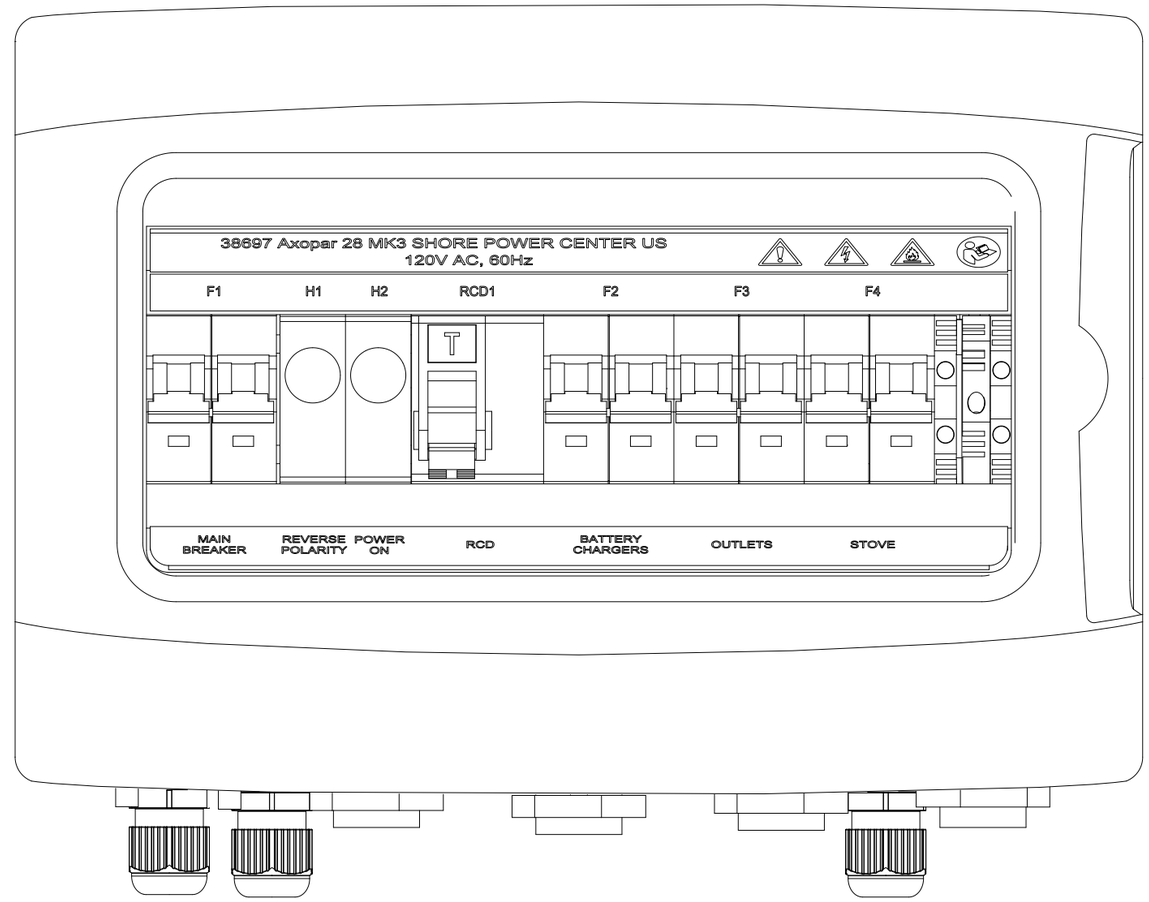

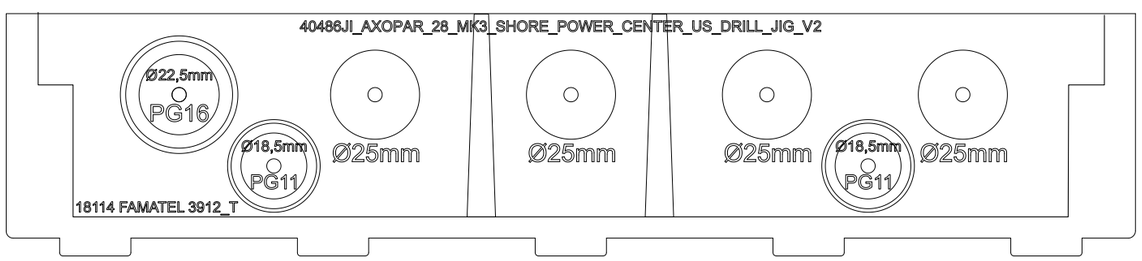

DRILL HOLES WITH 39478JI_V1 AND 40486JI_V2 AS GUIDE

40485_AXOPAR_28_MK3_SHORE_POWER_CENTER_US_LABEL_SET_V1

Label 1

38697 Axopar 28 MK3 SHORE POWER CENTER US
120V AC, 60Hz

Label 2

F1 H1 H2 RCD1 F2 F3 F4

Label 3

MAIN BREAKER | REVERSE POLARITY | POWER ON | RCD | BATTERY CHARGERS | OUTLETS | STOVE

8.12.2023	PF	A2: 2004976; Layout corrected, X1 -> flange model, pe ship moved	Date	11.4.2023	NAVIX.	Axopar			
19.2.2024	PF	B3: 2005055; PE length changes	Drawing by	PF		Boat	Sub-product code	38697 Product code	Project ID
15.4.2024	PF	B4 2005137; X1 connector type, RCD1 38366->14366	Sheet rev.	4		28	SHORE POWER CENTER US	HL	3 / 4
Date of modification	Modified by	Description	Project rev.	B	Copyright by	Boat model	Title	Loc	Sheet

USA SPC INSPECTION SHEET

PRODUCT LABEL

* DDMMYY-RUNNING NUMBER (For example. 11th March 2019 made product has serial number 110319-01, next is 110319-02 etc.)

	SERIAL NUMBER*						
VISUAL/ MANUAL	1. PERFORM FULL SYSTEM TEST -LABEL IN PLACE						
	2. CORRECT COMPONENTS AND CONNECTIONS						
	3. GROUND CONNECTION IN AND OUT						
	4. RCBO AND CIRCUIT BREAKERS IN I-POSITION						
TESTER	5. ISOLATION RESISTANCE (mA) max **						
	6. GROUND CIRCUIT 10A (Ohm) max **						
	7. RCD TEST, (ms @30mA) max						
	8. POLARITY TEST, PASS or FAIL **						
115Vac VOLTAGE LIVE	9. FUNCTIONAL AND RCD*** TEST, PASS or FAIL						
	SERIAL NUMBER STICKER						
	DATE						
	TESTED BY						

Made according to CENELEC EN 50106:2008 WITH ADDITION OF (8) POLARITY TEST AND (9) 115Vac FUNCTIONAL AND RCD TEST

** (5) ISOLATION RESISTANCE, (6) GROUND CIRCUIT AND (8) POLARITY TEST SHOULD BE TESTED FOR EVERY IN AND OUT

*** (9) RDC TEST-BUTTON OPERATION VERIFICATION

LIMITS:

ISOLATING RESISTOR 1000V = <5mA

GROUND CIRCUIT 10A = <0,2 Ohm

RDC TEST, Time <100mS @30mA

REVISION B

Date of modification	Modified by	Description
8.12.2023	PF	A2: 2004976; Layout corrected, X1 -> flange model, pe ship moved
19.2.2024	PF	B3: 2005055; PE length changes
15.4.2024	PF	B4 2005137; X1 connector type, RCD1 38366->14366

Date	27.4.2023
Drawing by	PF
Sheet rev.	4
Project rev.	B

Copyright by

Axopar		38697	
Boat	Sub-product code	Product code	Project ID
28	SHORE POWER CENTER US	HL	4 / 4
Boat model	Title	Loc	Sheet

Axopar 28 Mk3 230Vac BOW THRUSTER SYSTEM LAYOUT

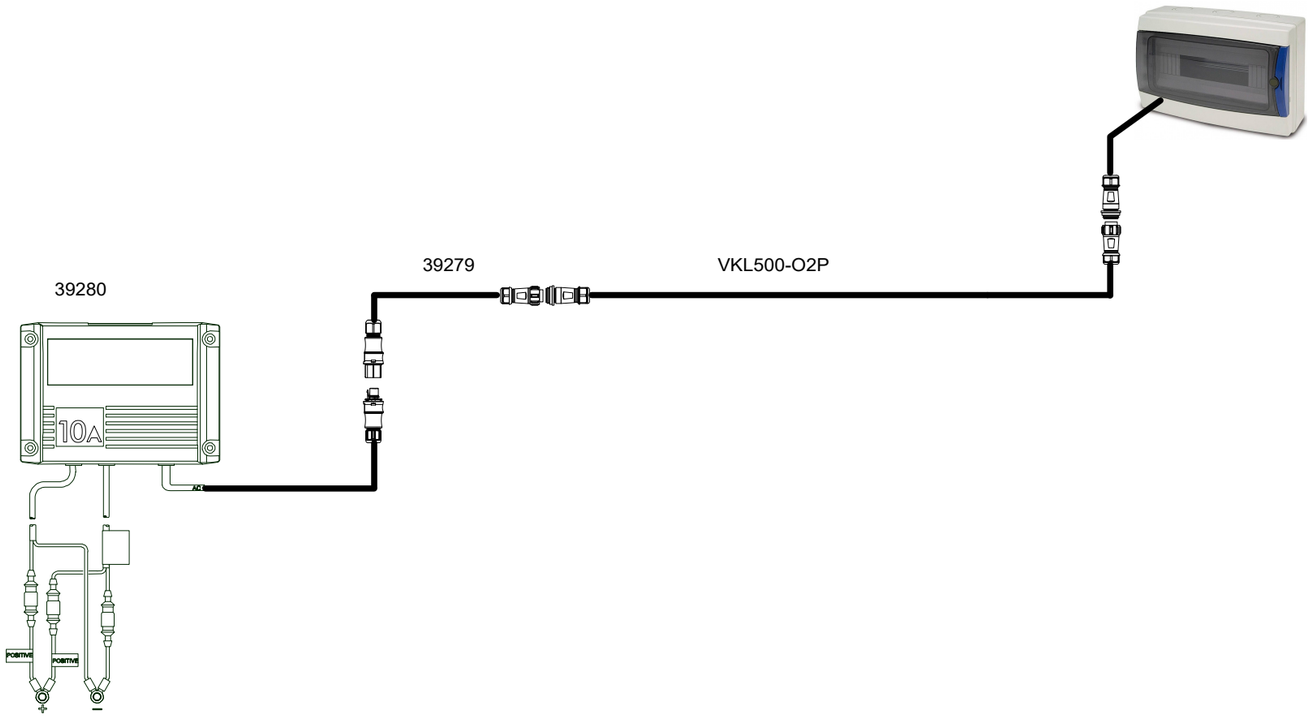

OPTION: BOW THRUSTER - parts list
VKL500-O2P - CONNECTION CABLE 500CM IP68 1,5 mm2 WITH TUBE -
39279 O2 male - RST female adapter
39280 EasyCharge 10A with RST

13.2.2024	PF	B2: Lenght extended to 5m	Date	1.6.2023	NAVIX.	Axopar Boat	Sub-product code	39273 Product code	Project ID
			Drawing by	PF		28 MK3 Boat model	BOW THRUSTER SYSTEM EU Title	HL Loc	2 / 4 Sheet
			Sheet rev.	2					
Date of modification	Modified by	Description	Project rev.	B	Copyright by				

Axopar 28 Mk3 120Vac BOW THRUSTER SYSTEM LAYOUT

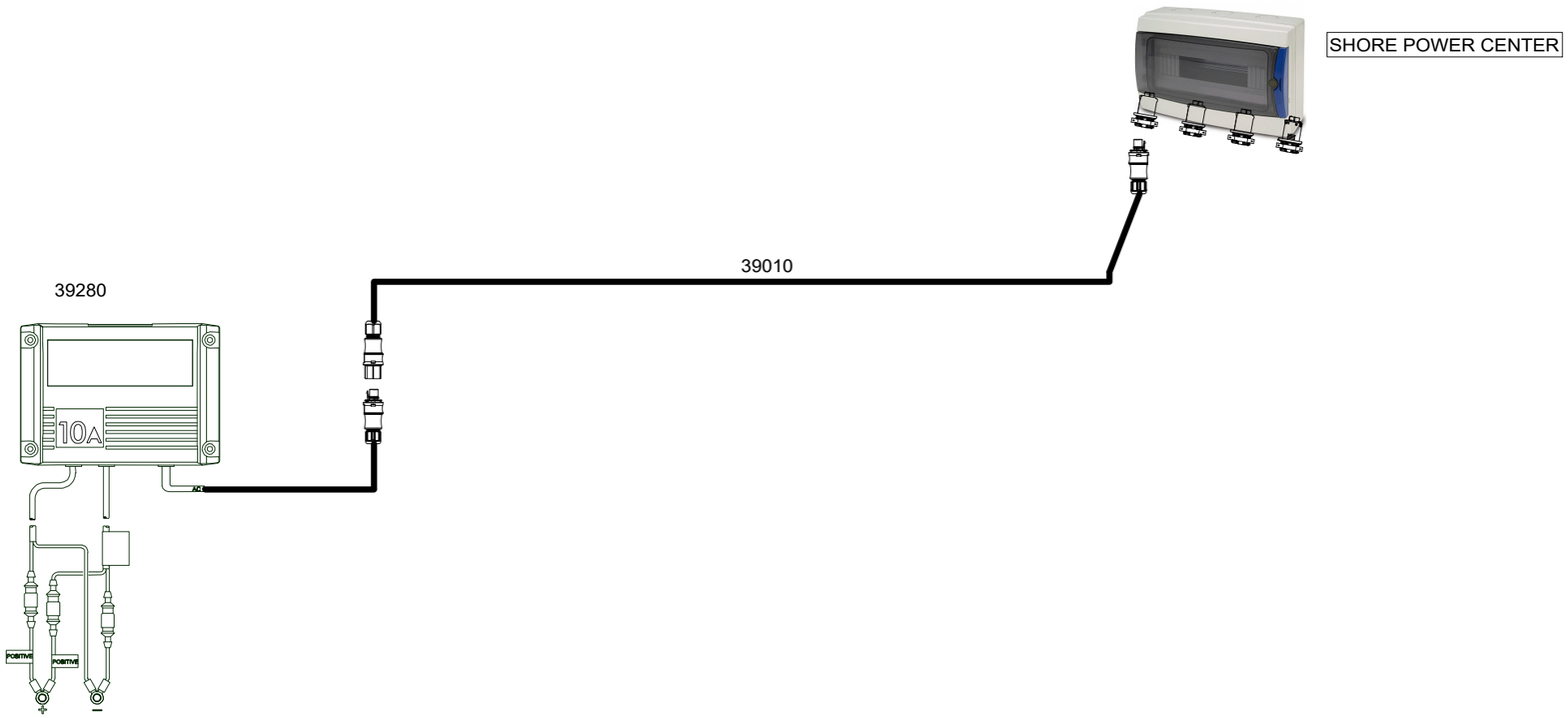

OPTION: BOW THRUSTER - parts list
39010 - 5m RST CONNECTION CABLE, AWG14 - USA -
39280 EasyCharge 10A with RST

13.2.2024	PF	B2: 2005055; Replaced 39007->39010	Date	31.5.2023	NAVIX.	Boat	Sub-product code	39274 Product code	Project ID
			Drawing by	PF					
			Sheet rev.	2		Boat model	BOW THRUSTER SYSTEM US Title	HL Loc	2 / 3 Sheet
Date of modification	Modified by	Description	Project rev.	B	Copyright by				

NOTATION

Reference Designators
A Separable assembly or sub-assembly
BT Battery
C Capacitor
D Diode (all types, including LED), diode isolator
DS Display, general light source, lamp, signal light
F Fuse
G Generator or oscillator
H Lamps (Hardware e.g., conduits)
K Relay or contactor
L Inductor or coil or ferrite bead
LS Loudspeaker, buzzer, horn
M Motor
Q Transistor, FET isolator
R Resistor
S Switch (all types, including buttons)
T Transformer
X Connector
XJ Junction, Busbar

HOW TO INTERPRET
REFERENCE DESIGNATORS
E.G.

DEVICES

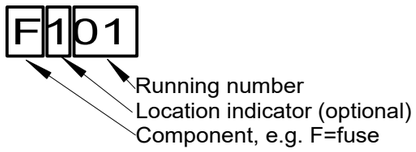

LP = optional lighting pack

HARNESS LAYOUT

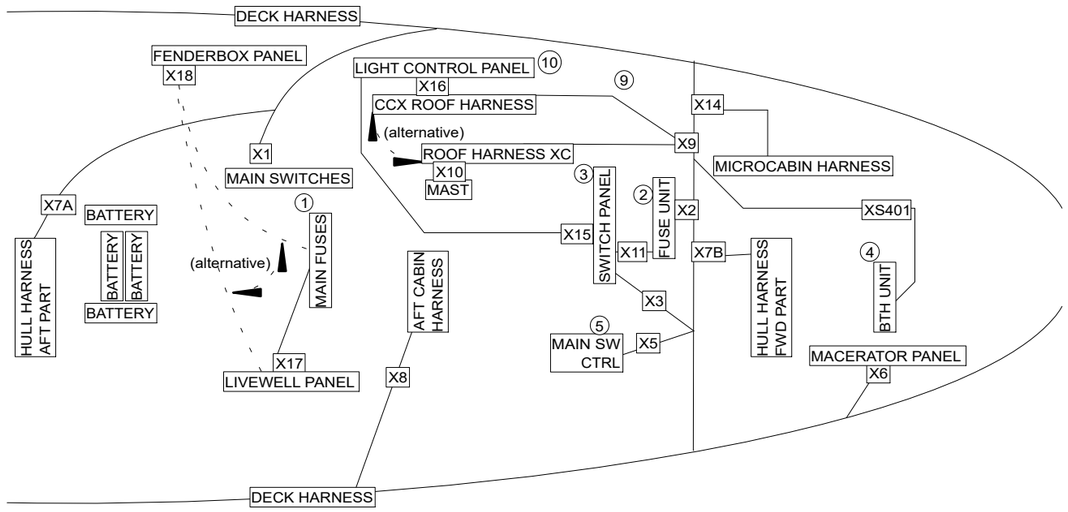

Navix disclaims all liability for any issues that may arise from the use of devices not specified in this documentation. The electrical system design is based exclusively on the devices listed herein, or on the estimated maximum power (or currents) for each circuit when the specific device model was unknown at the time of engineering. Any substitution of devices or the use of devices with higher power (or current) than specified herein voids all warranties and releases Navix from any responsibility for system performance or safety.

Date of modification	Modified by	Description
23.4.2024	PF	C5: 2005089; Not modified
8.8.2024	PF	C6: 2005089; Harness layout updated
1.10.2024	PF	C7: 2005259; Not modified

Date	20.3.2023
Drawing by	PF
Sheet rev.	7
Project rev.	C

NAVIX
Copyright by

Axopar Boat	Sub-product code	DIAGRAM Product code	2004468 Project ID
28 MK3 Boat model	NOTATION LAYOUT Title	HL Loc	1/ 106 Sheet

This page varies according to engine setup and main switch type.

2 ENGINE, REMOTE MAIN SWITCHES

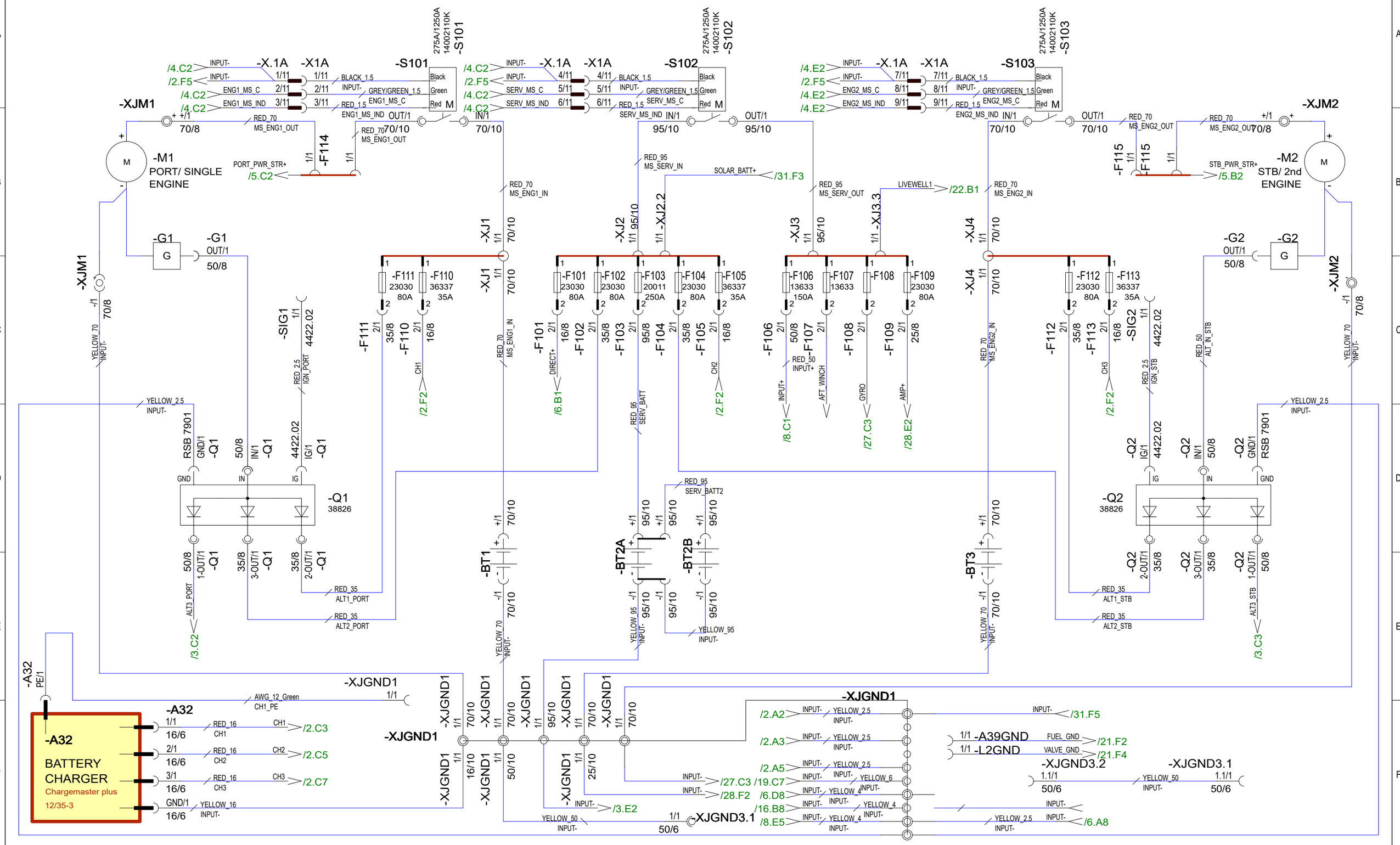

23.4.2024	PF	C5: 2005089; Not modified	Date	20.3.2023	NAVIX	Axopar		DIAGRAM	2004468
8.8.2024	PF	C6: 2005089; Not modified	Drawing by	PF		Boat	Sub-product code	Product code	Project ID
1.10.2024	PF	C7: 2005259; Added PE wire for A32 (optional route)	Sheet rev.	7		28 MK3	MAIN	HL	2 / 106
Date of modification	Modified by	Description	Project rev.	C	Copyright by	Boat model	Title	Loc	Sheet

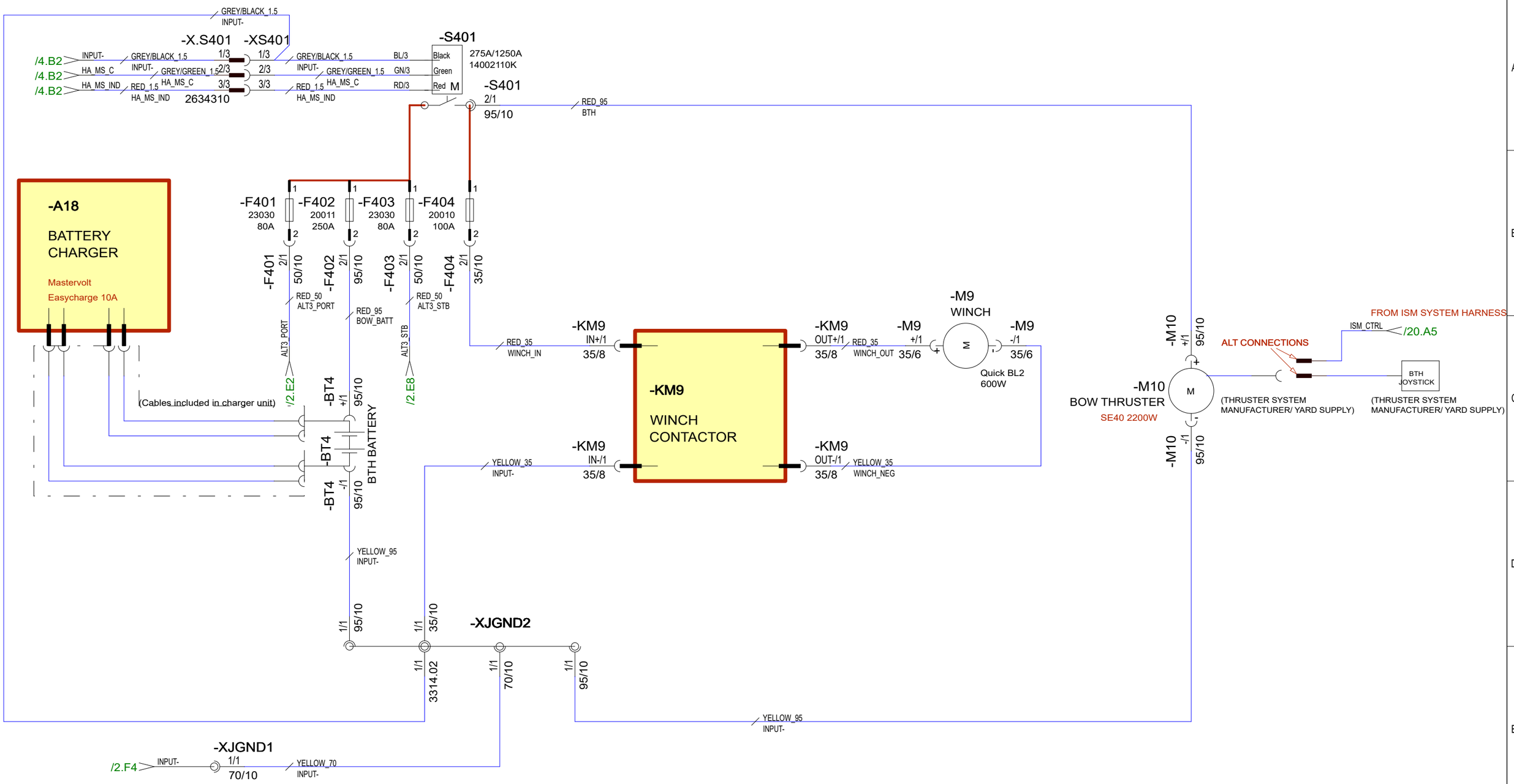

23.4.2024	PF	C5: 2005089; Not modified	Date	20.3.2023	NAVIX	Axopar		DIAGRAM	2004468
8.8.2024	PF	C6: 2005089; Not modified	Drawing by	PF		Boat	Sub-product code	Product code	Project ID
1.10.2024	PF	C7: 2005259; Not modified	Sheet rev.	7		28 MK3	HEAVY AUX	HL	3 / 106
Date of modification	Modified by	Description	Project rev.	C	Copyright by	Boat model	Title	Loc	Sheet

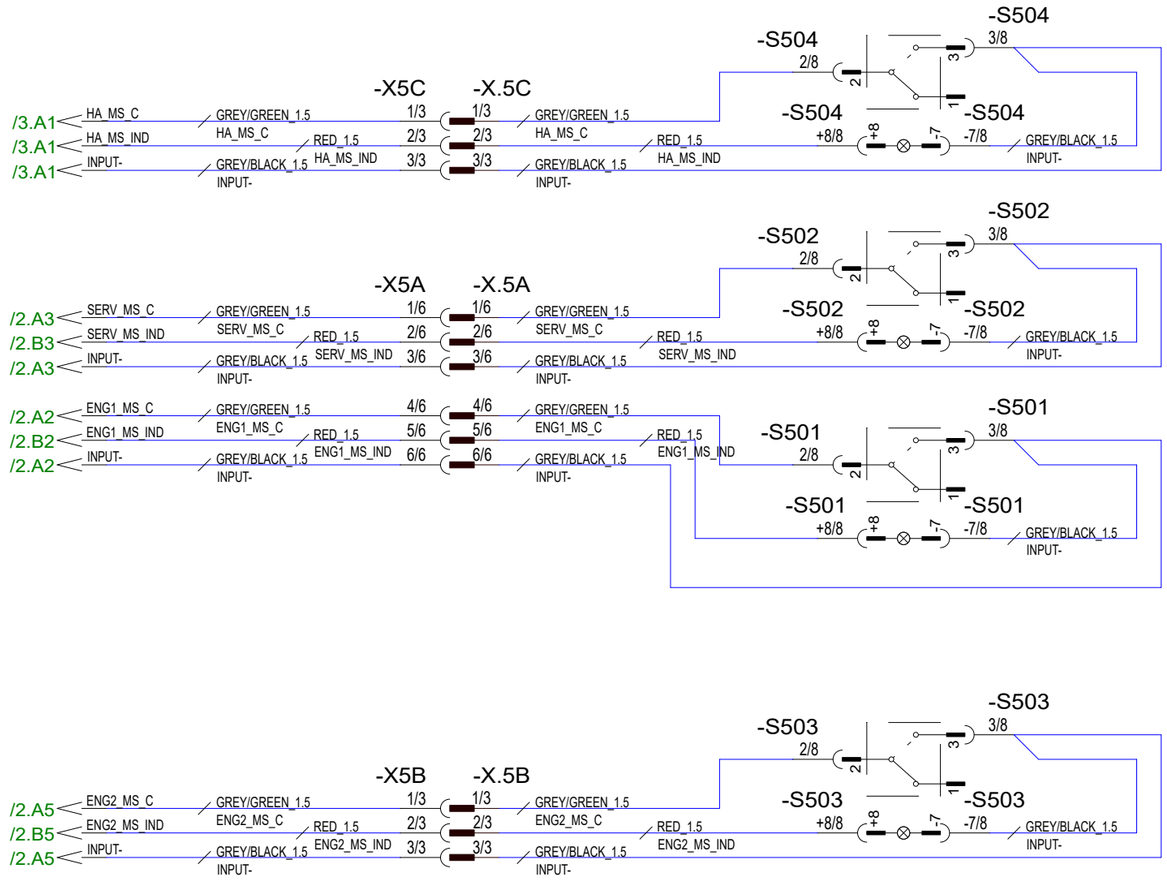

23.4.2024	PF	C5: 2005089; Not modified	Date	20.3.2023	NAVIX	Axopar		DIAGRAM	2004468
8.8.2024	PF	C6: 2005089; Not modified	Drawing by	PF		Boat	Sub-product code	Product code	Project ID
1.10.2024	PF	C7: 2005259; Not modified	Sheet rev.	7		28 MK3	REMOTE MAIN SWITCHES	HL	4 / 106
Date of modification	Modified by	Description	Project rev.	C	Copyright by	Boat model	Title	Loc	Sheet

*1 1-engine installation

*2 2-engine installation with APS

*1 & *3 2-engine installation with JPO

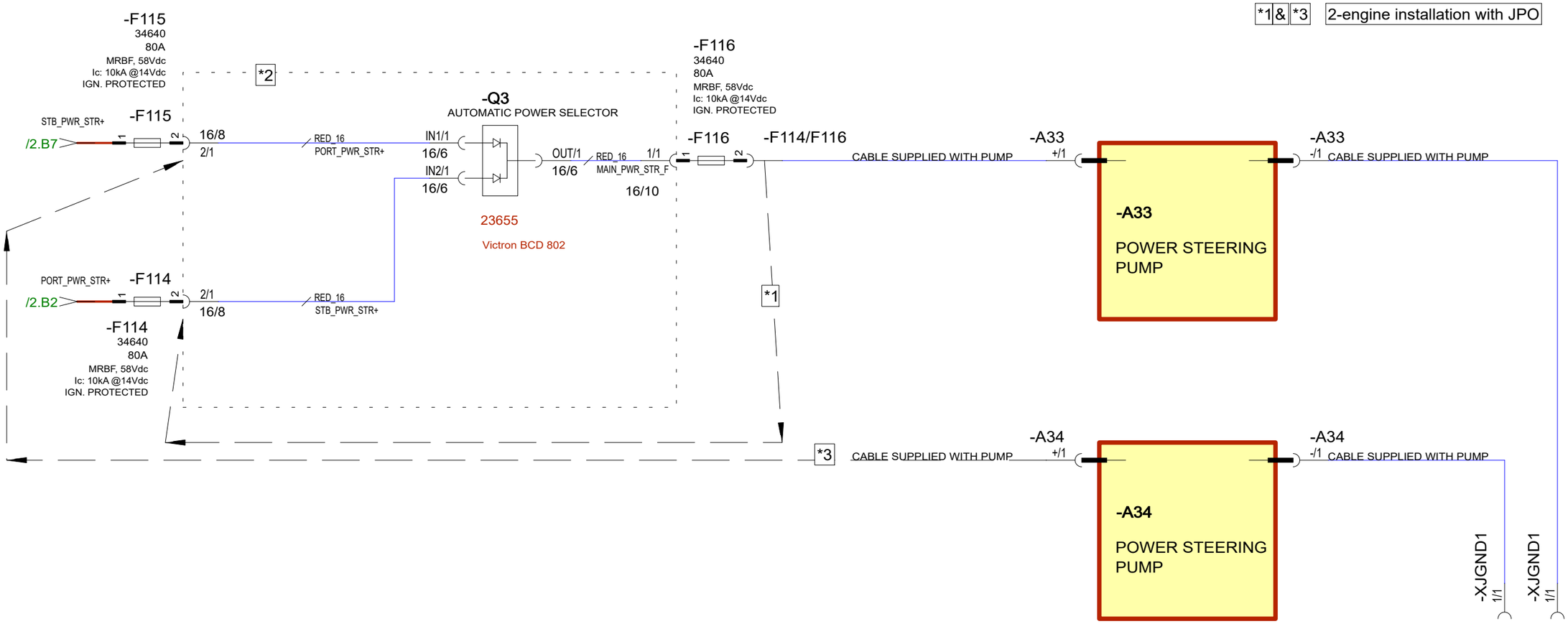

23.4.2024	PF	C5: 2005089; Not modified	Date 24.3.2023	NAVIX	Axopar		DIAGRAM	2004468
8.8.2024	PF	C6: 2005089; Not modified	Drawing by PF		Boat	Sub-product code	Product code	Project ID
1.10.2024	PF	C7: 2005259; Not modified	Sheet rev. 7		28 MK3	POWER STEER APS, JPO	HL	5 / 106
Date of modification	Modified by	Description	Project rev. C	Copyright by	Boat model	Title	Loc	Sheet

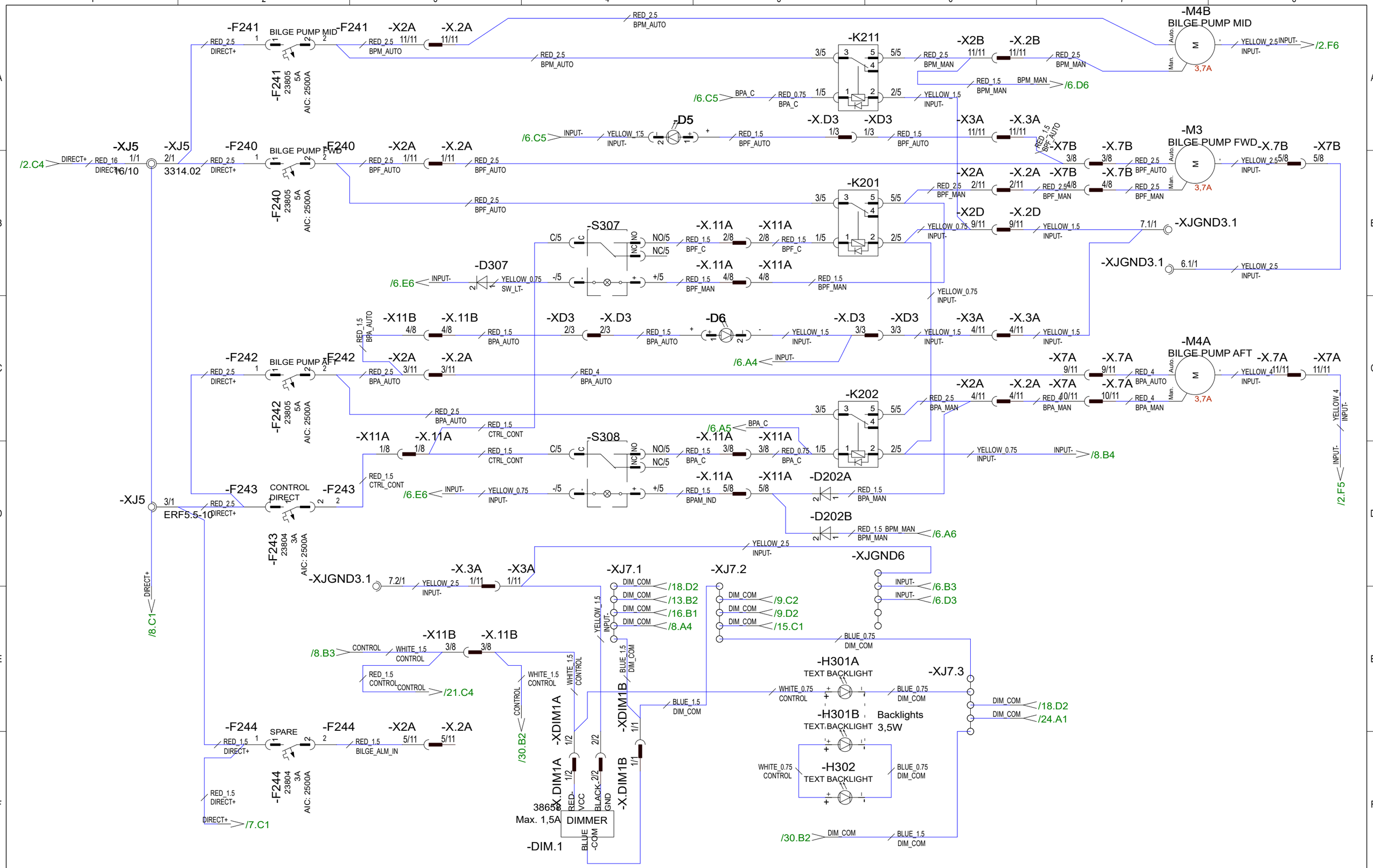

23.4.2024	PF	C5: 2005089; Dimmer wiring, Relay type, added BP M4B, text backlts	Date 20.3.2023	NAVIX	Axopar		DIAGRAM 2004468
8.8.2024	PF	C6: 2005089; Not modified	Drawing by PF		Boat	Sub-product code	Product code / Project ID
1.10.2024	PF	C7: 2005259; Not modified	Sheet rev. 7		28 MK3	BILGE PUMPS, SWITCH PANEL DIMMING	HL
Date of modification	Modified by	Description	Project rev. C	Copyright by	Boat model	Title	Loc / Sheet 6 / 106

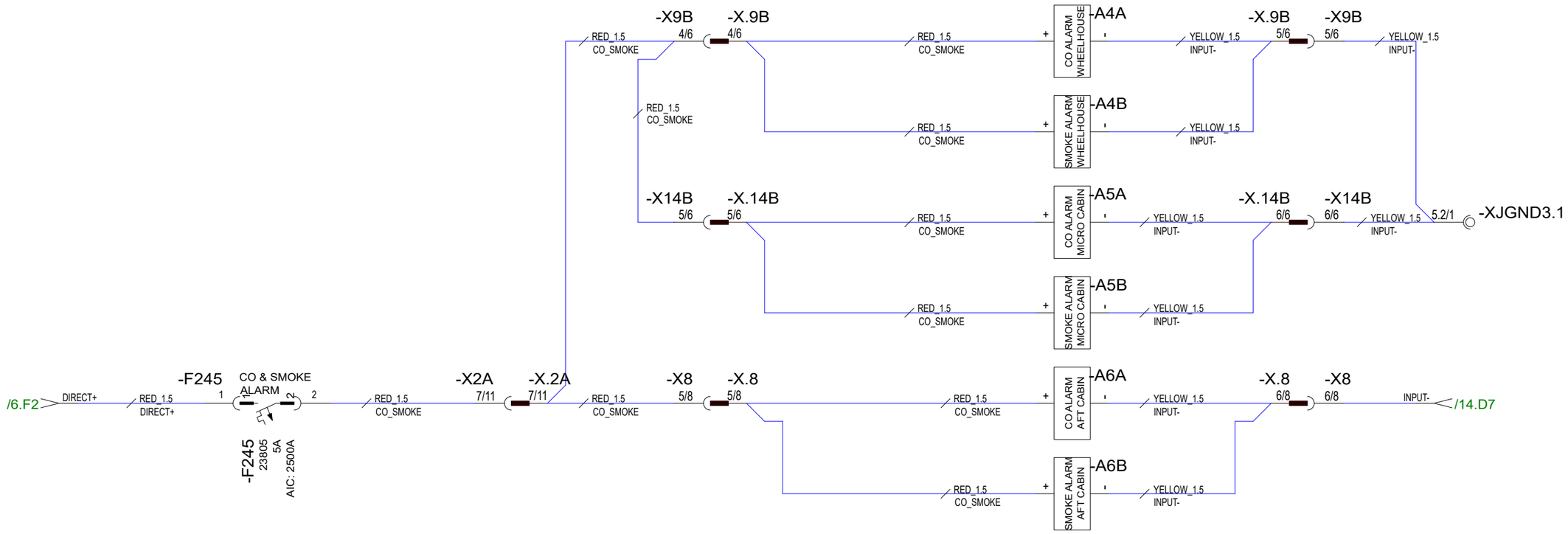

23.4.2024	PF	C5: 2005089; A6B wiring	Date 20.3.2023	NAVIX	Axopar		DIAGRAM	2004468
8.8.2024	PF	C6: 2005089; Not modified	Drawing by PF		Boat	Sub-product code	Product code	Project ID
1.10.2024	PF	C7: 2005259; Not modified	Sheet rev. 7		28 MK3	FIRE & CO ALARMS	HL	7 / 106
Date of modification	Modified by	Description	Project rev. C	Copyright by	Boat model	Title	Loc	Sheet

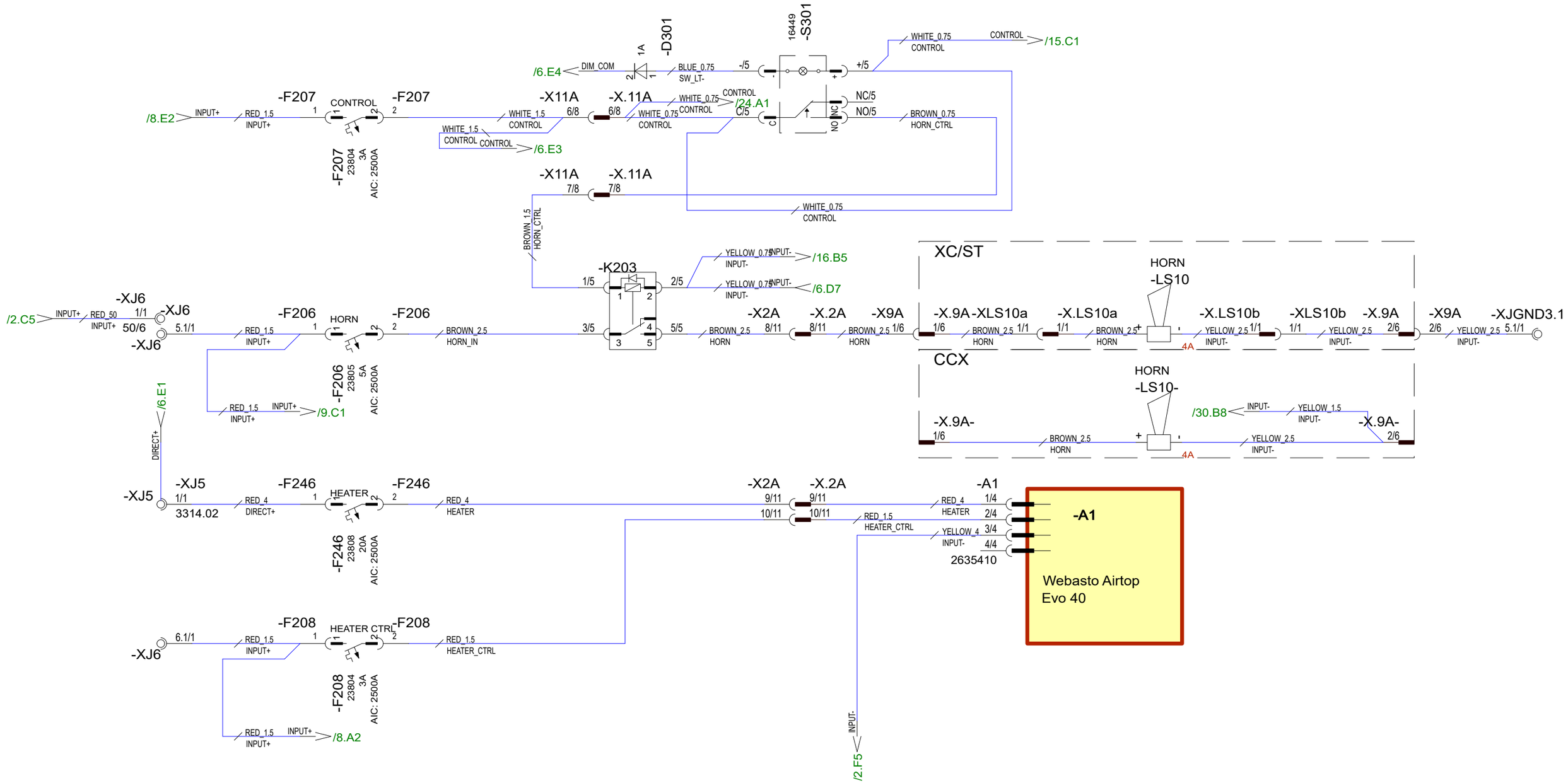

23.4.2024	PF	C5: 2005089; Relay type	Date	20.3.2023	NAVIX	Axopar		DIAGRAM	2004468
8.8.2024	PF	C6: 2005089; Horn: mast -> roof (removed from X10A)	Drawing by	PF		Boat	Sub-product code	Product code	Project ID
1.10.2024	PF	C7: 2005259; Not modified	Sheet rev.	7		28 MK3	HEATER, HORN	HL	8 / 106
Date of modification	Modified by	Description	Project rev.	C	Copyright by	Boat model	Title	Loc	Sheet

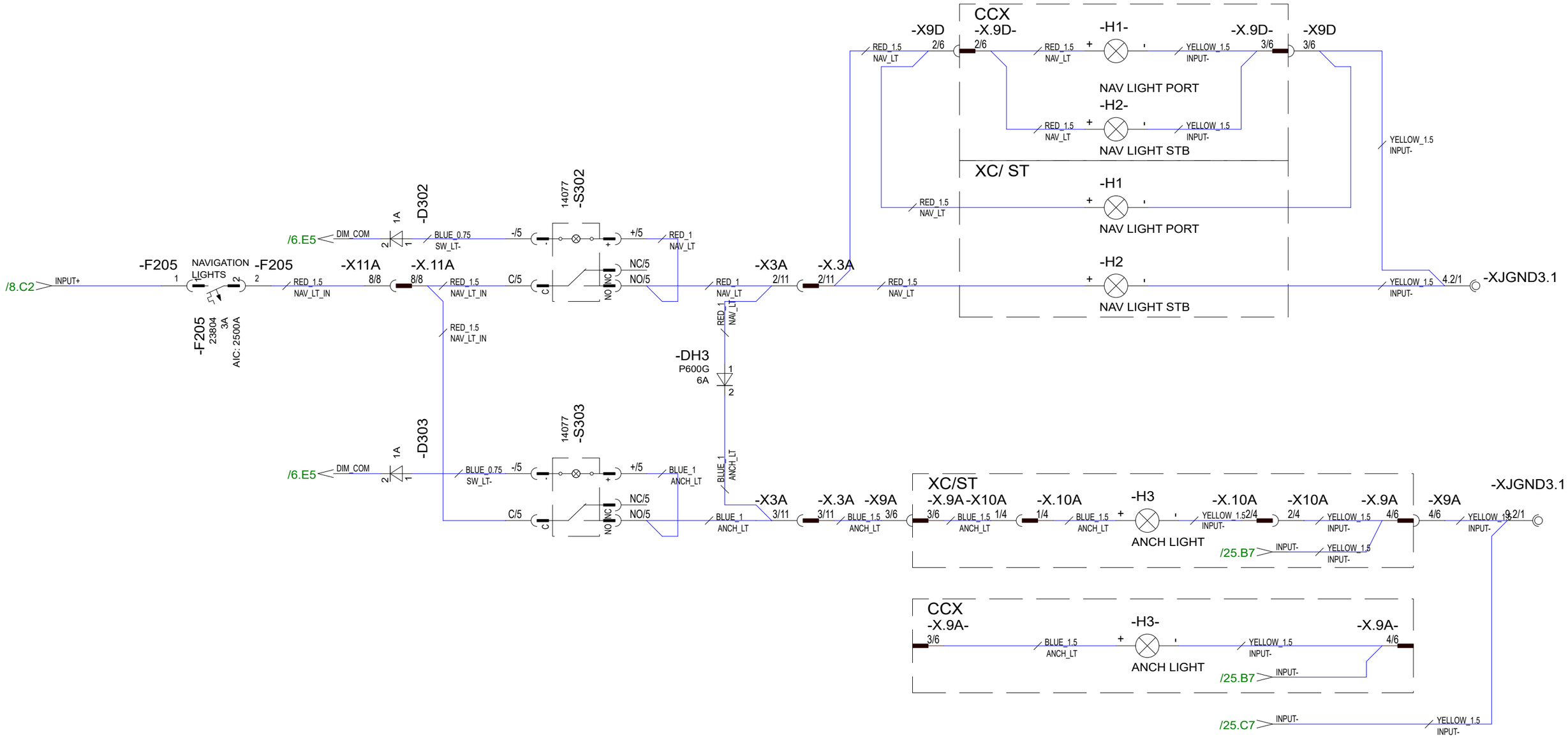

23.4.2024	PF	C5: 2005089; Nav lt wiring changed (added branch to CCX roof)	Date	20.3.2023	NAVIX	Axopar		DIAGRAM	2004468
8.8.2024	PF	C6: 2005089; Not modified	Drawing by	PF		Boat	Sub-product code	Product code	Project ID
1.10.2024	PF	C7: 2005259; Not modified	Sheet rev.	7		28 MK3	NAV LIGHTS	HL	9 / 106
Date of modification	Modified by	Description	Project rev.	C	Copyright by	Boat model	Title	Loc	Sheet

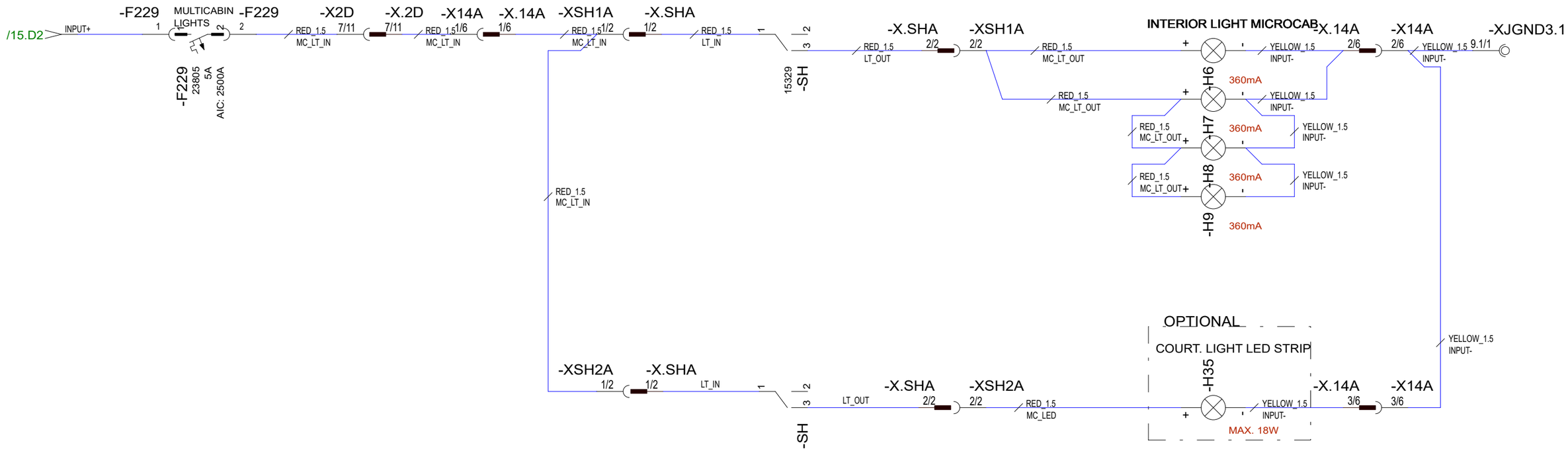

23.4.2024	PF	C5: 2005089; H35 minus	Date	20.3.2023	NAVIX	Axopar		DIAGRAM	2004468
8.8.2024	PF	C6: 2005089; F229 function updated to "Multicabin lights"	Drawing by	PF		Boat	Sub-product code	Product code	Project ID
1.10.2024	PF	C7: 2005259; Not modified	Sheet rev.	7		28 MK3	LIGHTS MICROCABIN	HL	10 / 106
Date of modification	Modified by	Description	Project rev.	C	Copyright by	Boat model	Title	Loc	Sheet

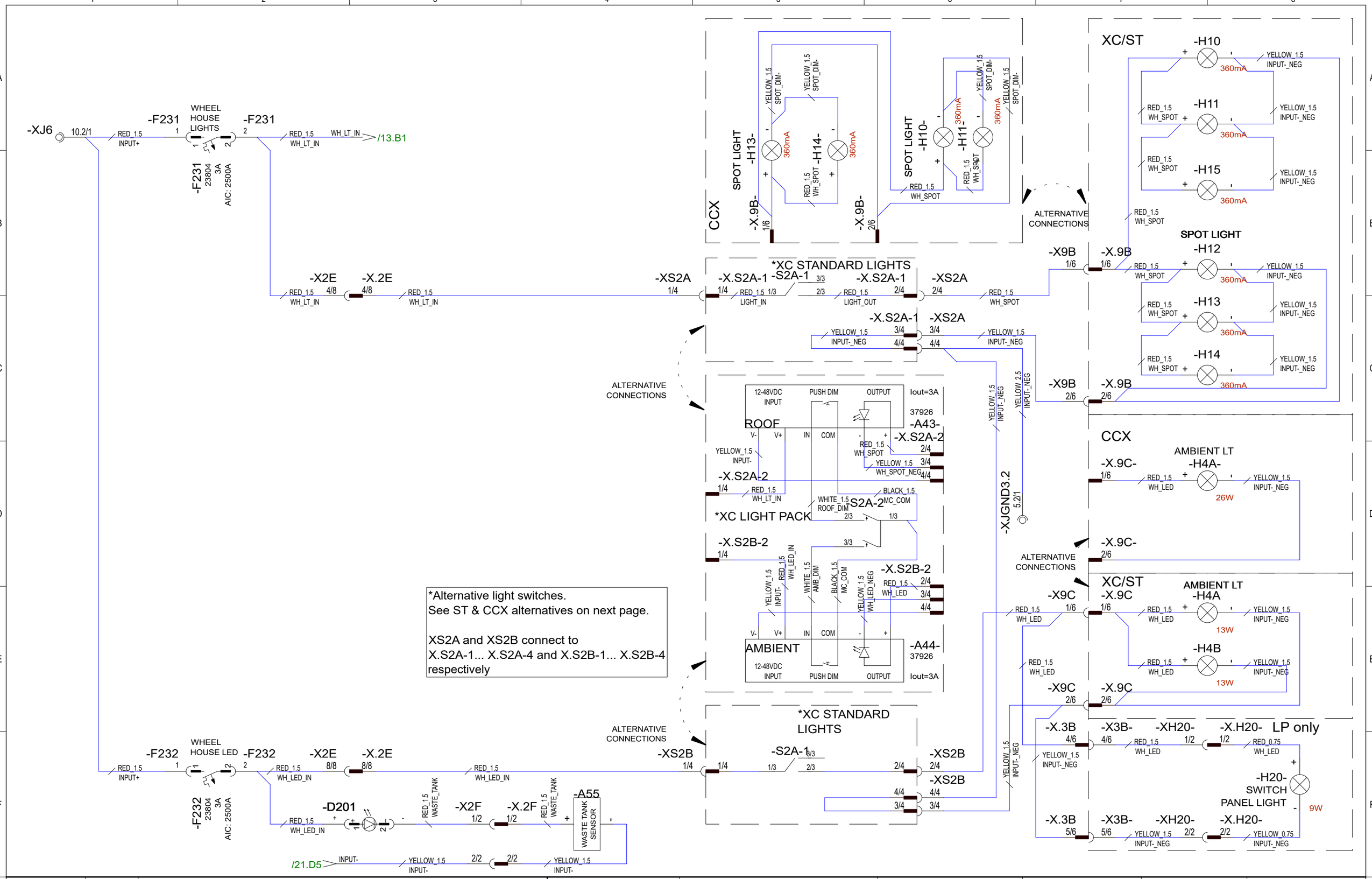

23.4.2024	PF	C5: 2005089; Option structure for MC lights built	Date	20.3.2023	NAVIX	Axopar		DIAGRAM	2004468
8.8.2024	PF	C6: 2005089; Not modified	Drawing by	PF		Boat	Sub-product code	Product code	Project ID
1.10.2024	PF	C7: 2005259; H10&H11->int lts, H4C&H4D->red lts	Sheet rev.	7		28 MK3	LIGHTS MAIN CABIN XC	HL	11/ 106
Date of modification	Modified by	Description	Project rev.	C	Copyright by	Boat model	Title	Loc	Sheet

*Alternative light switches.
See XC alternatives on previous page.

XS2A and XS2B connect to
X.S2A-1... X.S2A-4 and X.S2B-1... X.S2B-4
respectively

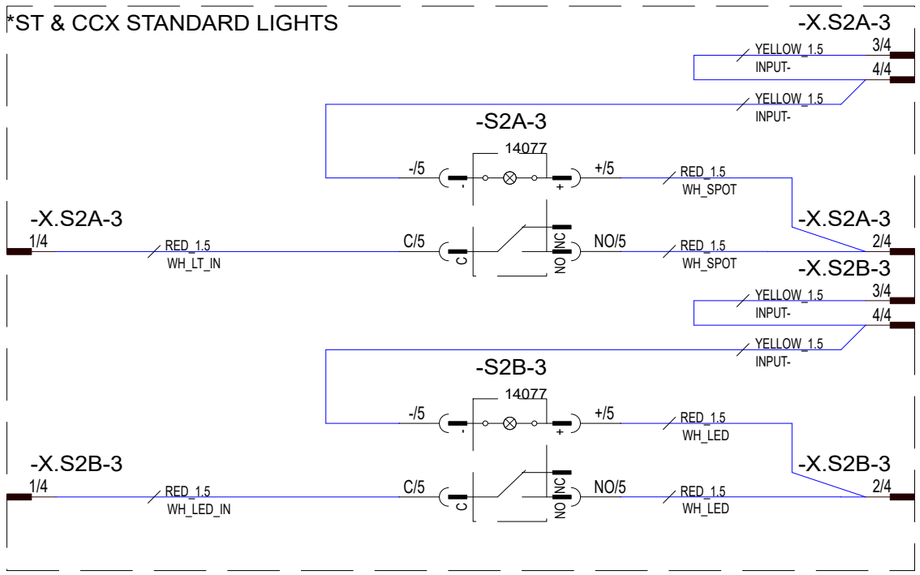

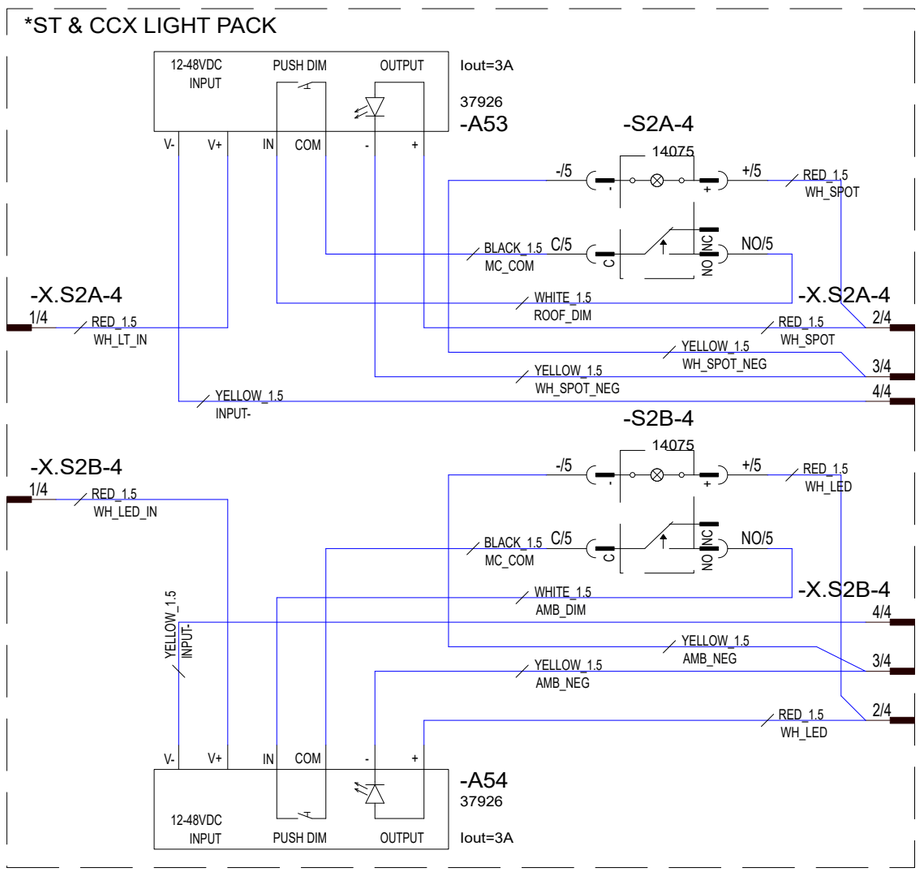

26.4.2024	PF	C5: 2005089; New page	Date	25.4.2024	NAVIX	Axopar		DIAGRAM	2004468
8.8.2024	PF	C6: 2005089; Not modified	Drawing by	PF		Boat	Sub-product code	Product code	Project ID
1.10.2024	PF	C7: 2005259; H4A- & H4B- added	Sheet rev.	7		28 MK3	LIGHTS MAIN CABIN ST/CCX	HL	12 / 106
Date of modification	Modified by	Description	Project rev.	C	Copyright by	Boat model	Title	Loc	Sheet

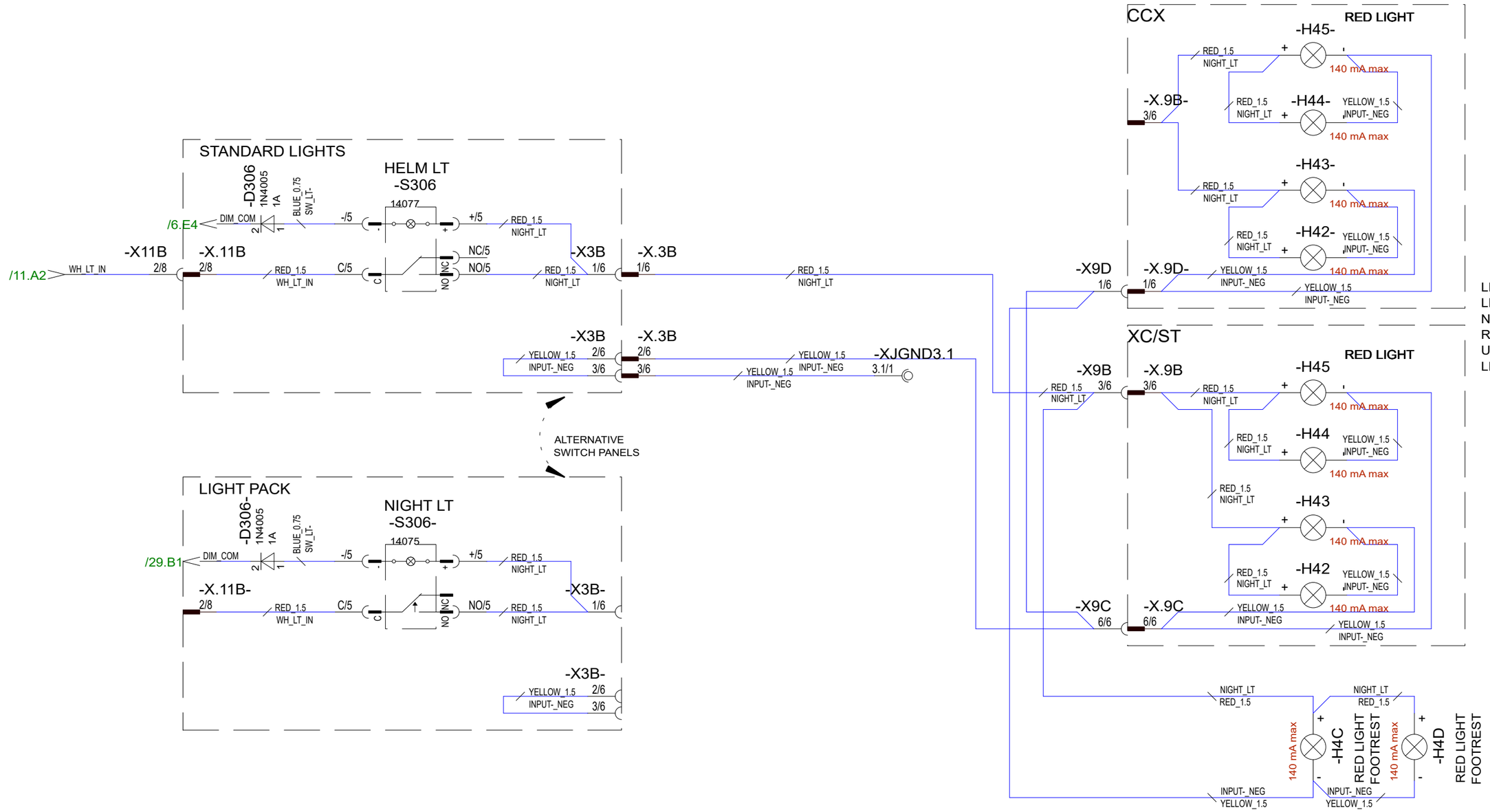

LIGHT PACK: RED LIGHTS
NON-LIGHT PACK: RED LIGHTS ARE USED AS 'HELM LIGHTS'

			Date 7.10.2024	NAVIX	Axopar		DIAGRAM	2004468
			Drawing by PF		Boat	Sub-product code	Product code	Project ID
7.10.2024	PF	C7:2005259;New sheet, ++red lts, helm lts->night lts, helm lts dim A42 remv	Sheet rev. 7		28 MK3	NIGHT LIGHTS	HL	13 / 106
Date of modification	Modified by	Description	Project rev. C	Copyright by	Boat model	Title	Loc	Sheet

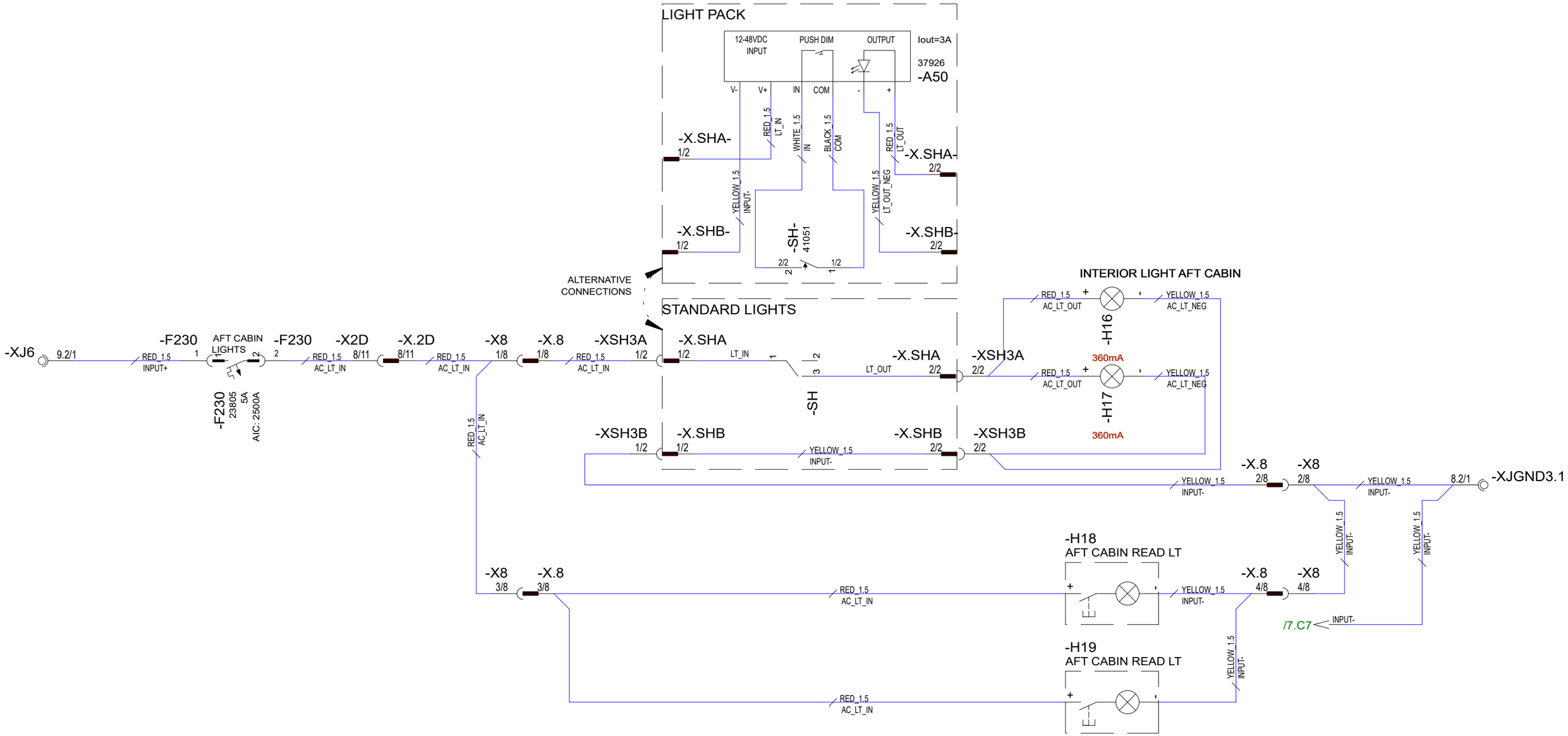

23.4.2024	PF	C5: 2005089; Standard switch neg. wire and LP version of switch added	Date	20.3.2023	NAVIX	Axopar		DIAGRAM	2004468
8.8.2024	PF	C6: 2005089; Not modified	Drawing by	PF		Boat	Sub-product code	Product code	Project ID
1.10.2024	PF	C7: 2005259; Not modified	Sheet rev.	7		28 MK3	LIGHTS AFT CABIN	HL	14 / 106
Date of modification	Modified by	Description	Project rev.	C	Copyright by	Boat model	Title	Loc	Sheet

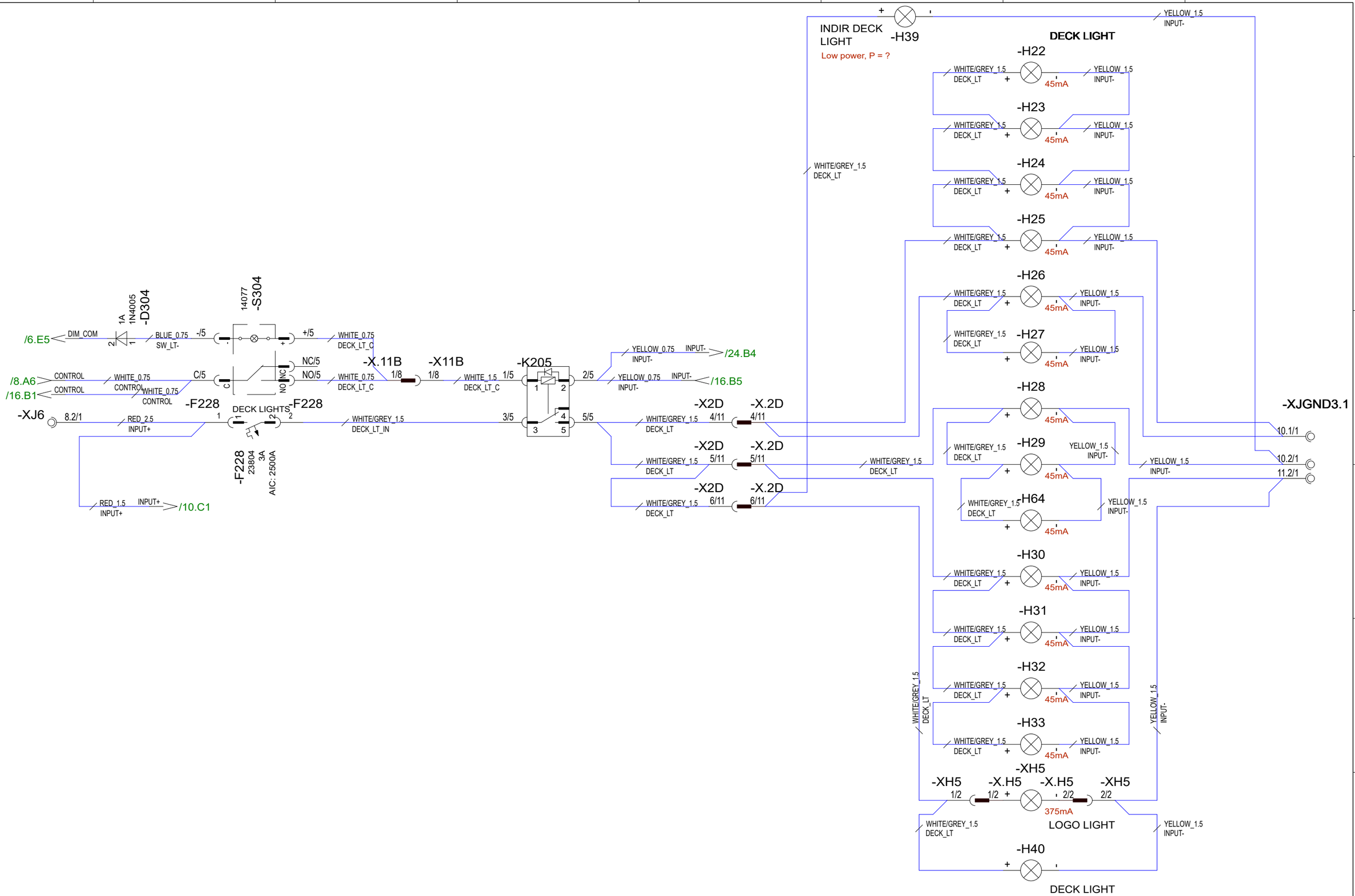

23.4.2024	PF	C5: 2005089; Relay type changed, STB deck lights added	Date	20.3.2023	NAVIX	Axopar		DIAGRAM	2004468
8.8.2024	PF	C6: 2005089; Not modified	Drawing by	PF		Boat	Sub-product code	Product code	Project ID
1.10.2024	PF	C7: 2005259; Change F228 10A->3A	Sheet rev.	7		28 MK3	DECK LIGHTS	HL	15 / 106
Date of modification	Modified by	Description	Project rev.	C	Copyright by	Boat model	Title	Loc	Sheet

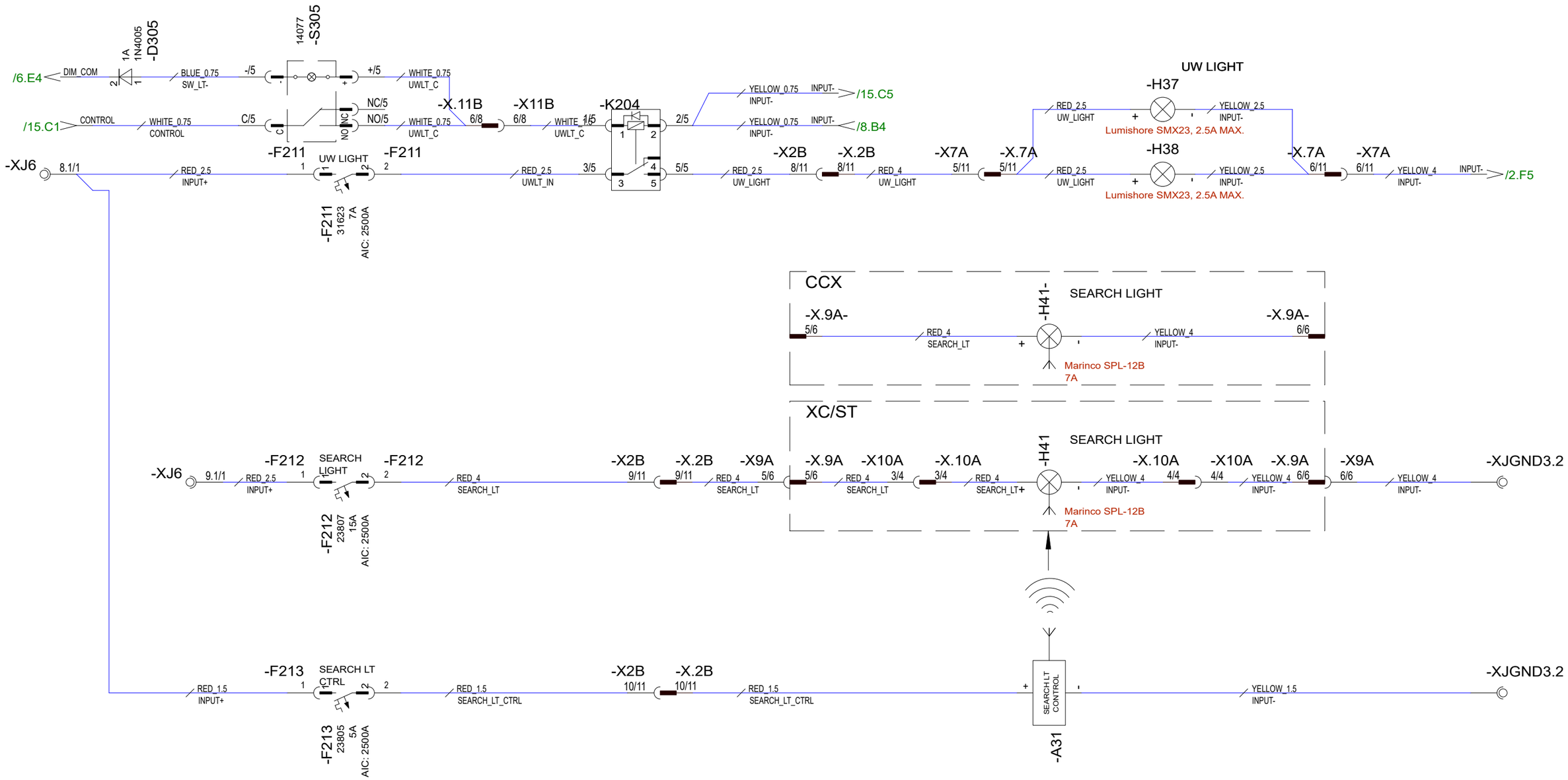

23.4.2024	PF	C5: 2005089; CCX reference added, relay type	Date	20.3.2023	NAVIX	Axopar		DIAGRAM	2004468
8.8.2024	PF	C6: 2005089; Not modified	Drawing by	PF		Boat	Sub-product code	Product code	Project ID
1.10.2024	PF	C7: 2005259; Not modified	Sheet rev.	7		28 MK3	UW LIGHTS, SEARCH LIGHT	HL	16 / 106
Date of modification	Modified by	Description	Project rev.	C	Copyright by	Boat model	Title	Loc	Sheet

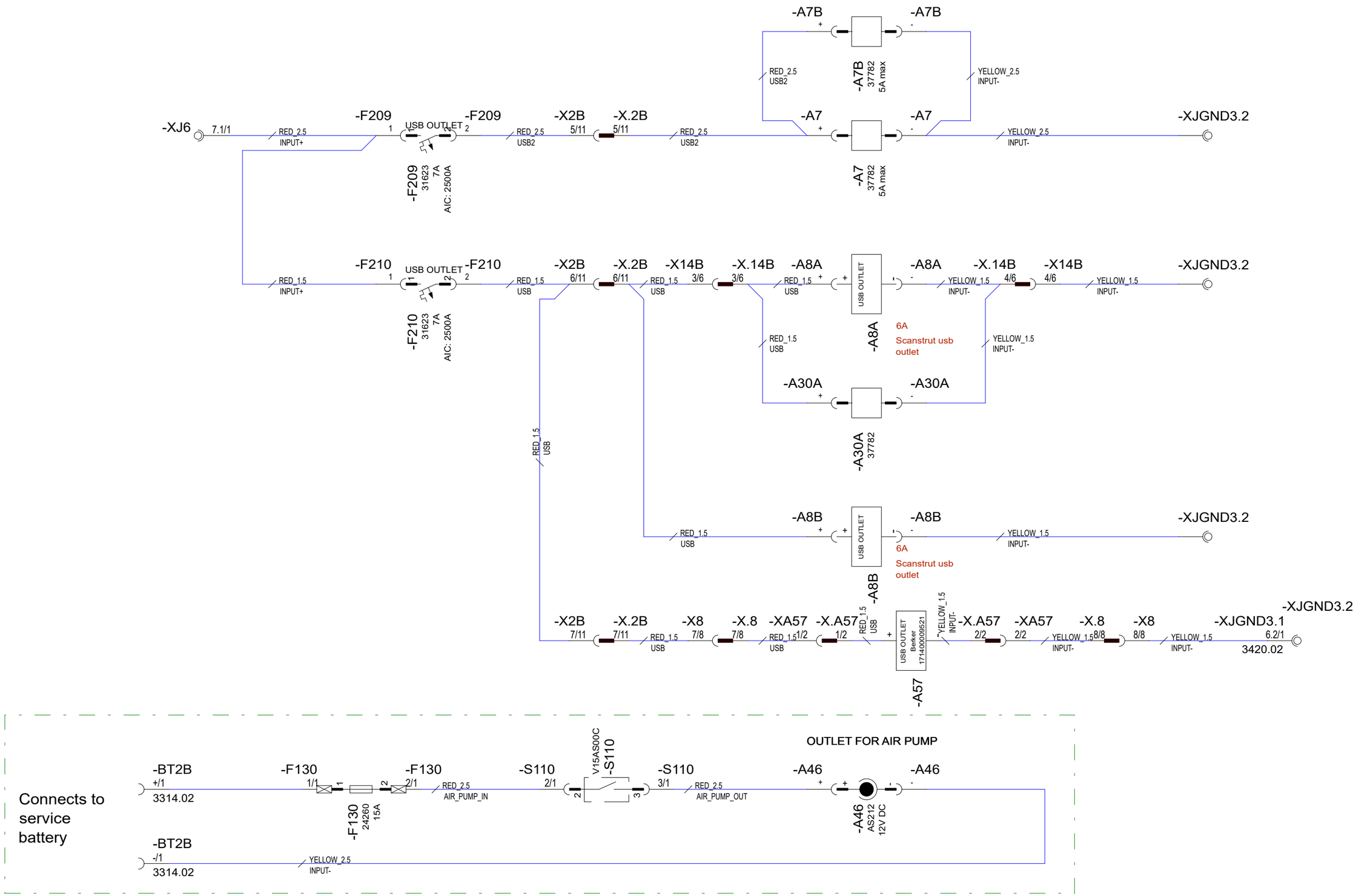

23.4.2024	PF	C5: 2005089; Not modified	Date	20.3.2023	NAVIX	Axopar		DIAGRAM	2004468
8.8.2024	PF	C6: 2005089; Not modified	Drawing by	PF		Boat	Sub-product code	Product code	Project ID
1.10.2024	PF	C7: 2005259; A57 added, A7&A7B wless ch->usb outlet, A30A type ch	Sheet rev.	7		28 MK3	USB OUTLET	HL	17 / 106
Date of modification	Modified by	Description	Project rev.	C	Copyright by	Boat model	Title	Loc	Sheet

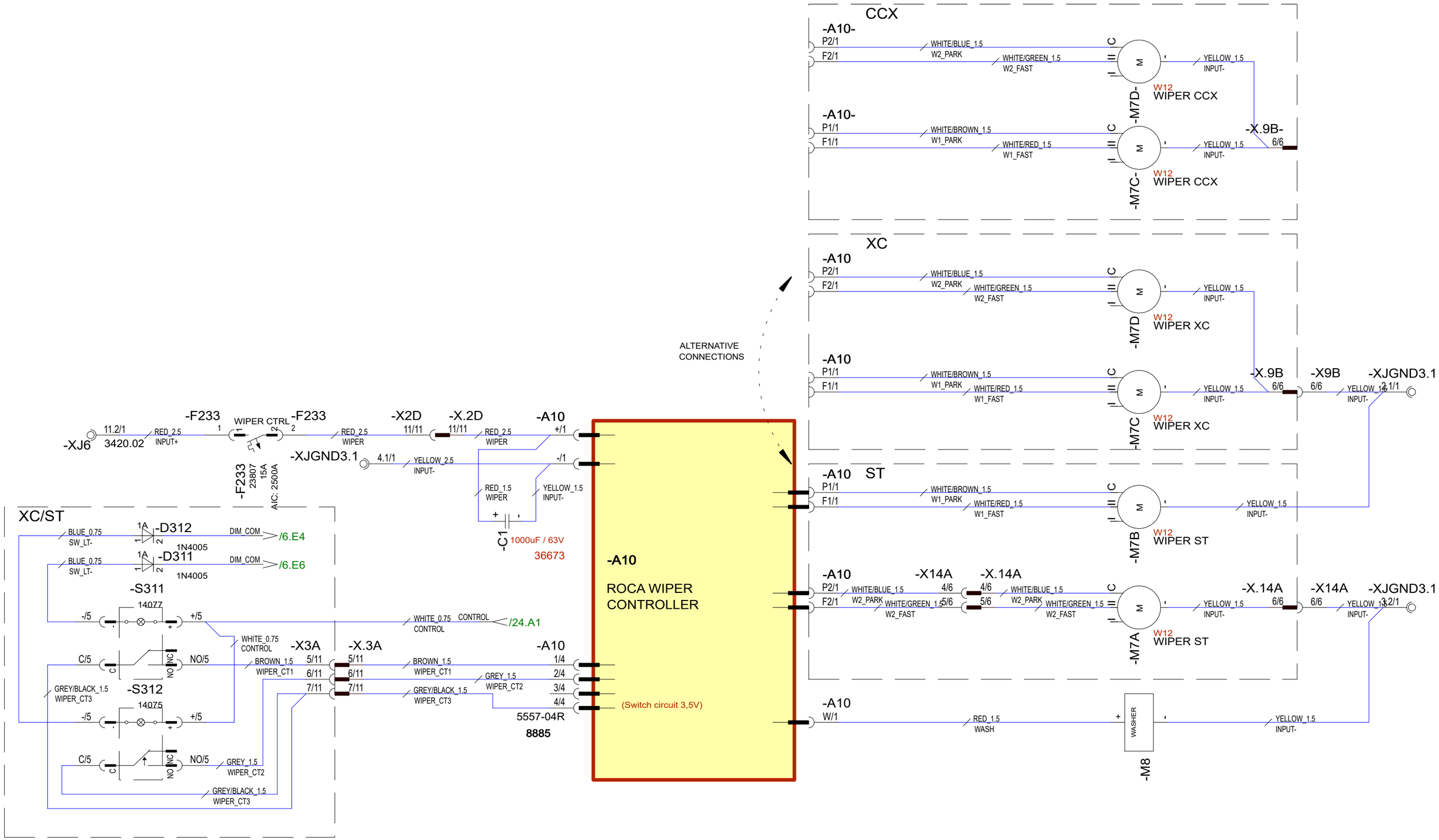

23.4.2024	PF	C5: 2005089;Wip sw->2xEAO &>>swp, CCX ref. & 2nd wiper to XC added	Date	20.3.2023	NAVIX	Axopar		DIAGRAM	2004468
8.8.2024	PF	C6: 2005089; Not modified	Drawing by	PF		Boat	Sub-product code	Product code	Project ID
1.10.2024	PF	C7: 2005259; A10 corrected, filter capacitor added	Sheet rev.	7		28 MK3	WIPERS	HL	18 / 106
Date of modification	Modified by	Description	Project rev.	C	Copyright by	Boat model	Title	Loc	Sheet

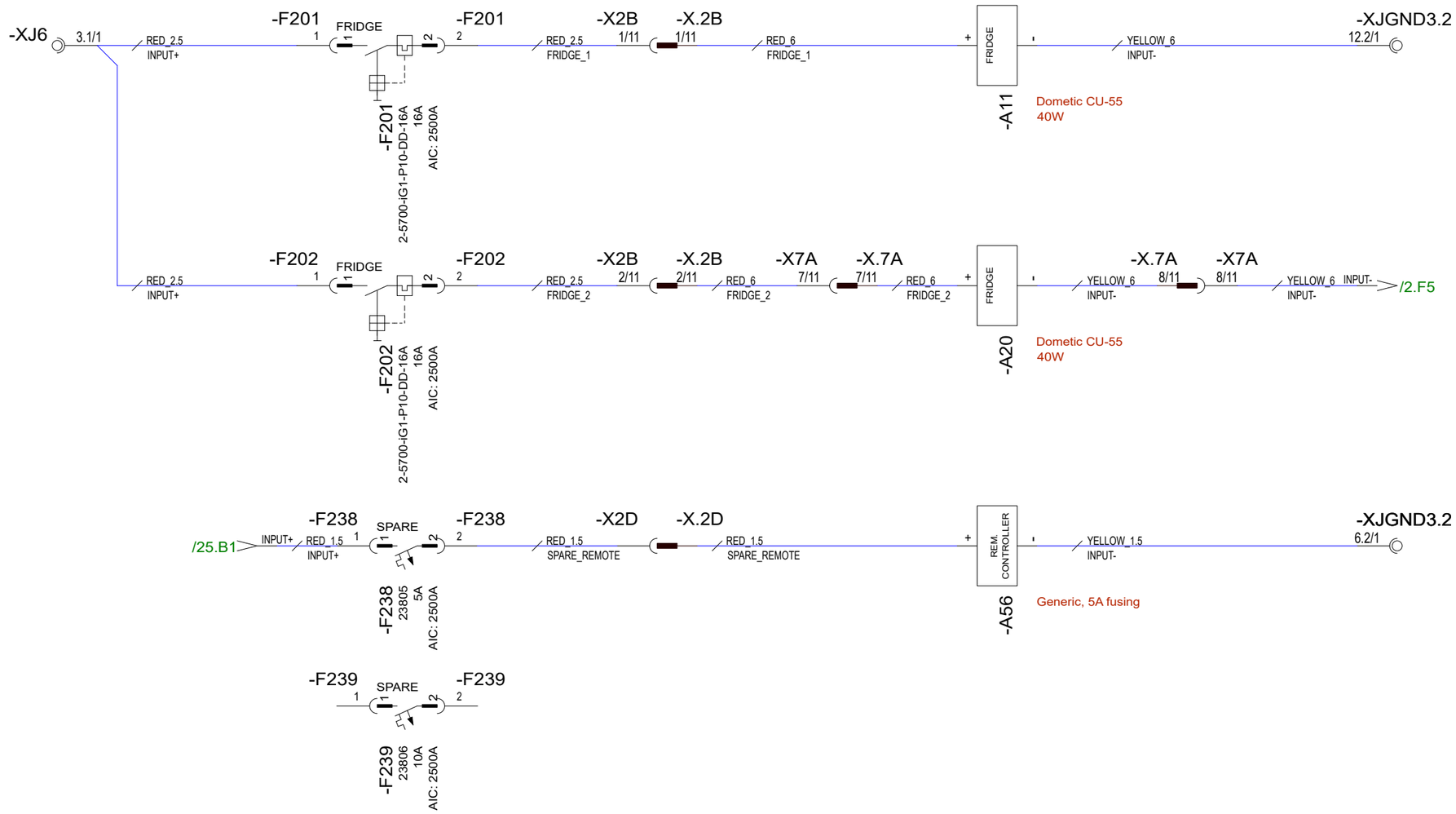

23.4.2024	PF	C5: 2005089; Fridge A20 model changed and moved to fender box	Date	20.3.2023	NAVIX	Axopar		DIAGRAM	2004468
8.8.2024	PF	C6: 2005089; Not modified	Drawing by	PF		Boat	Sub-product code	Product code	Project ID
1.10.2024	PF	C7: 2005259; Not modified	Sheet rev.	7		28 MK3	FRIDGES, SPARE	HL	19 / 106
Date of modification	Modified by	Description	Project rev.	C	Copyright by	Boat model	Title	Loc	Sheet

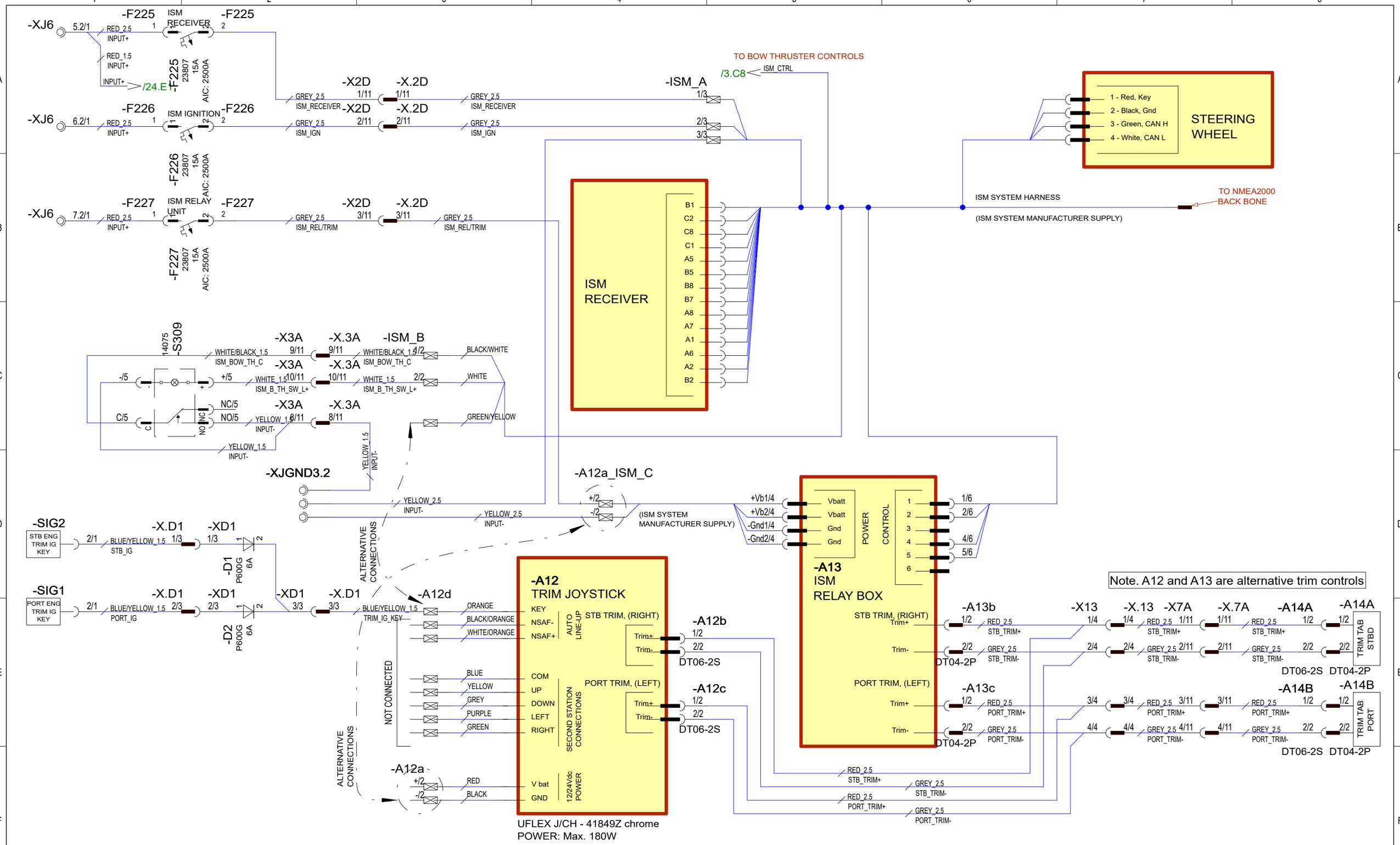

23.4.2024	PF	C5: 2005089; Not modified	Date	20.3.2023	NAVIX	Axopar		DIAGRAM	2004468
8.8.2024	PF	C6: 2005089; Not modified	Drawing by	PF		Boat	Sub-product code	Product code	Project ID
1.10.2024	PF	C7: 2005259; Not modified	Sheet rev.	7		28 MK3	TRIM/ISM SYSTEM	HL	20 / 106
Date of modification	Modified by	Description	Project rev.	C	Copyright by	Boat model	Title	Loc	Sheet

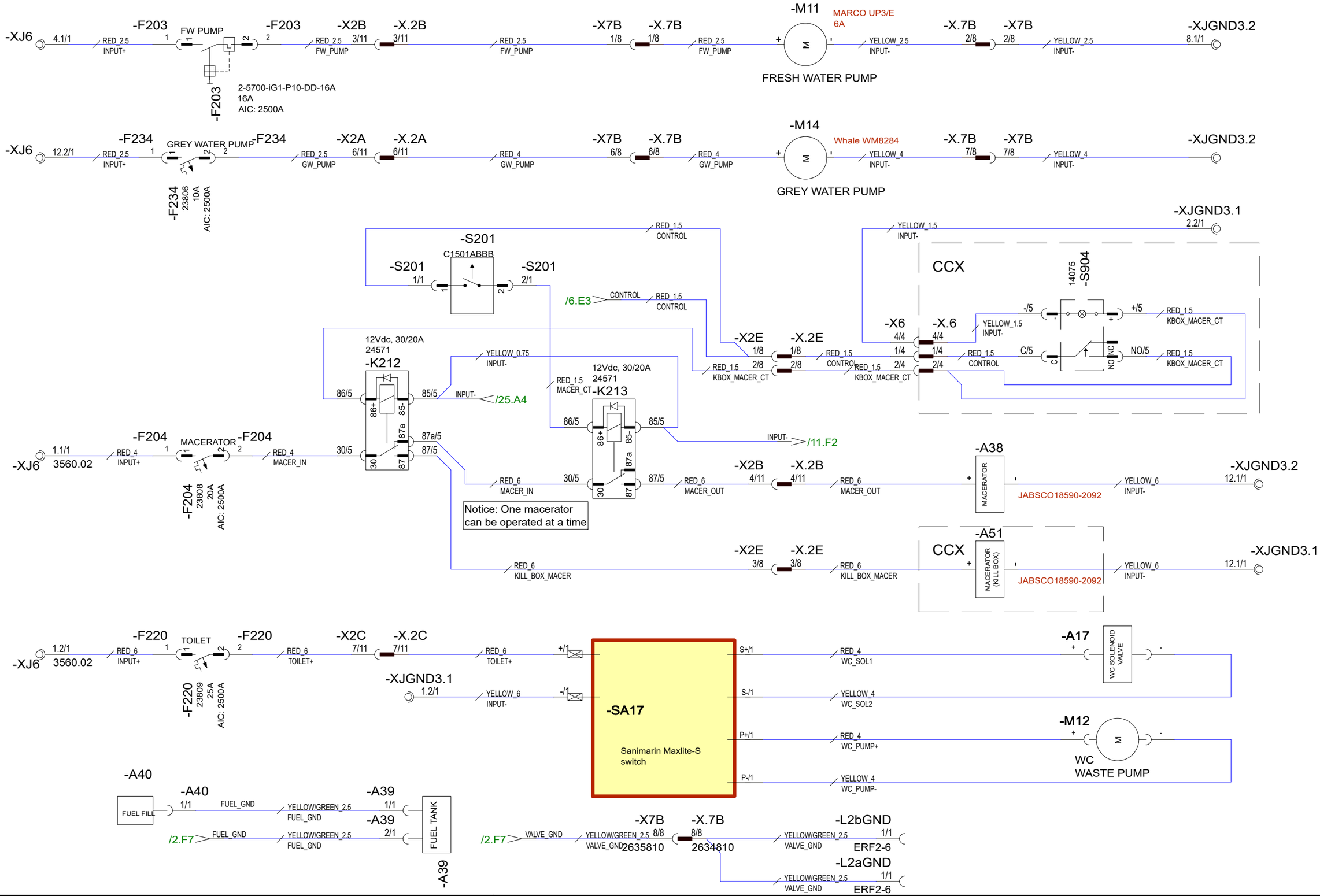

23.4.2024	PF	C5: 2005089; Kill box macerator+ctrl & GW pump added	Date	20.3.2023	NAVIX	Axopar		DIAGRAM	2004468
8.8.2024	PF	C6: 2005089; Valve L2 gnd added	Drawing by	PF		Boat	Sub-product code	Product code	Project ID
1.10.2024	PF	C7: 2005259; Not modified	Sheet rev.	7		28 MK3	FRESH WATER, TOILET, KILL BOX	HL	21/ 106
Date of modification	Modified by	Description	Project rev.	C	Copyright by	Boat model	Title	Loc	Sheet

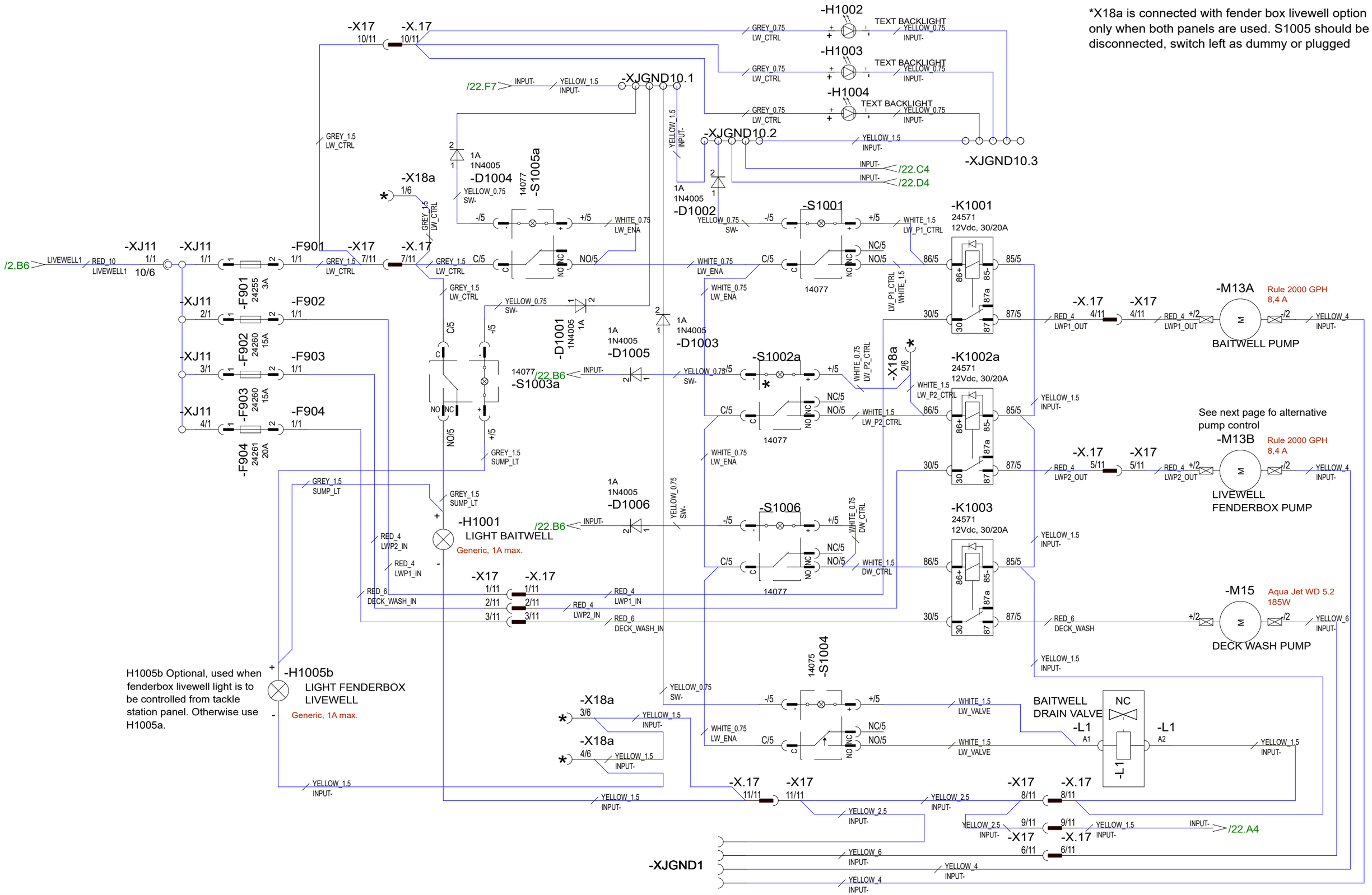

6.5.2024	PF	C5: 2005089; New page	Date	6.5.2024	NAVIX	Axopar		DIAGRAM	2004468
8.8.2024	PF	C6: 2005089; Not modified	Drawing by	PF		Boat	Sub-product code	Product code	Project ID
1.10.2024	PF	C7: 2005259; M13C -> M15 (funct. pump->deckwash), Fbox ctrl added	Sheet rev.	7		28 MK3	CCX LIVEWELL	HL	22 / 106
Date of modification	Modified by	Description	Project rev.	C	Copyright by	Boat model	Title	Loc	Sheet

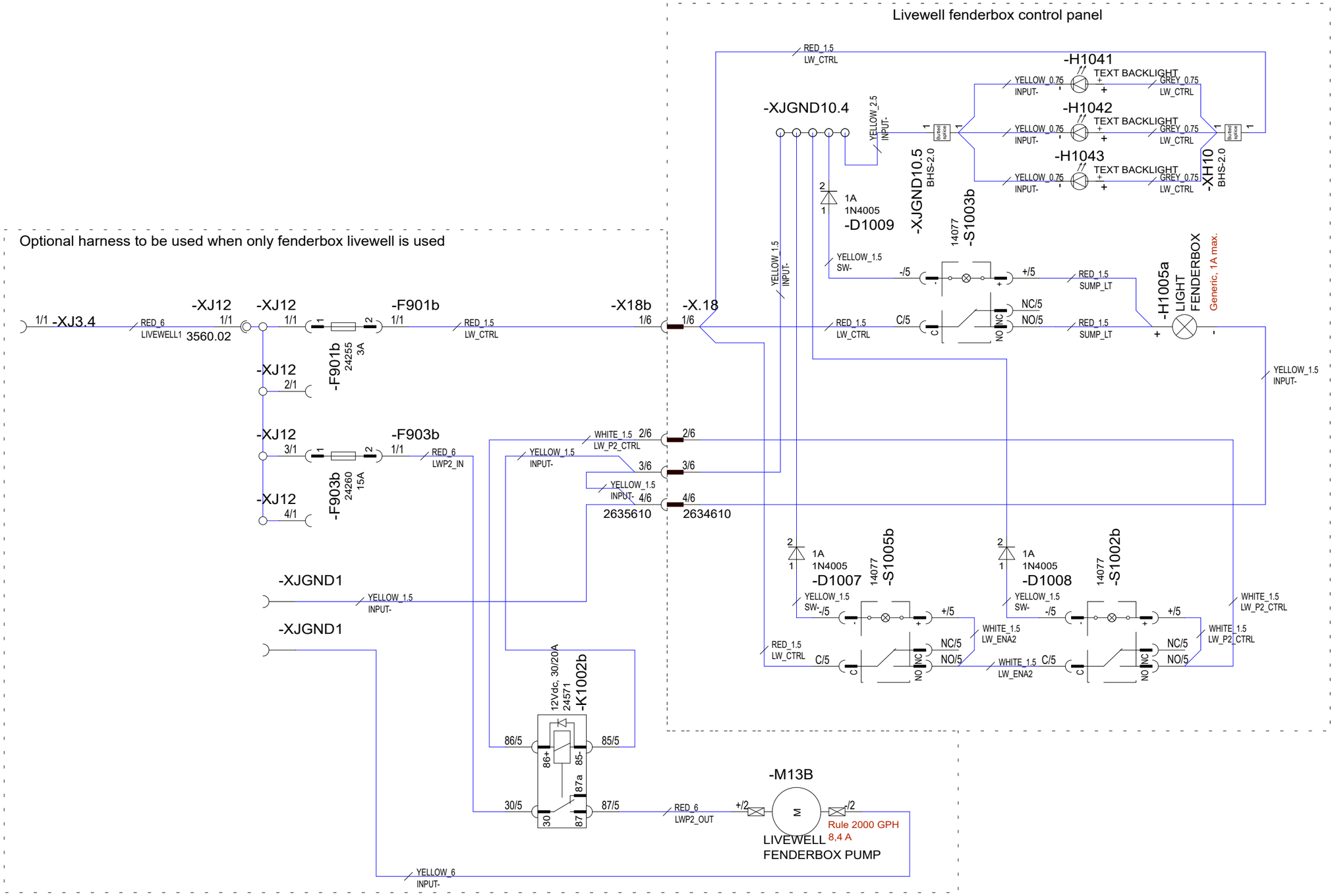

			Date 11.10.2024	NAVIX	Axopar		DIAGRAM	2004468
			Drawing by PF		Boat	Sub-product code	Product code	Project ID
1.10.2024	PF	C7: 2005259; New sheet, added fenderbox livewell panel and harness	Sheet rev. 7		28 MK3	CCX LIVEWELL FENDER BOX	HL	23 / 106
Date of modification	Modified by	Description	Project rev. C	Copyright by	Boat model	Title	Loc	Sheet

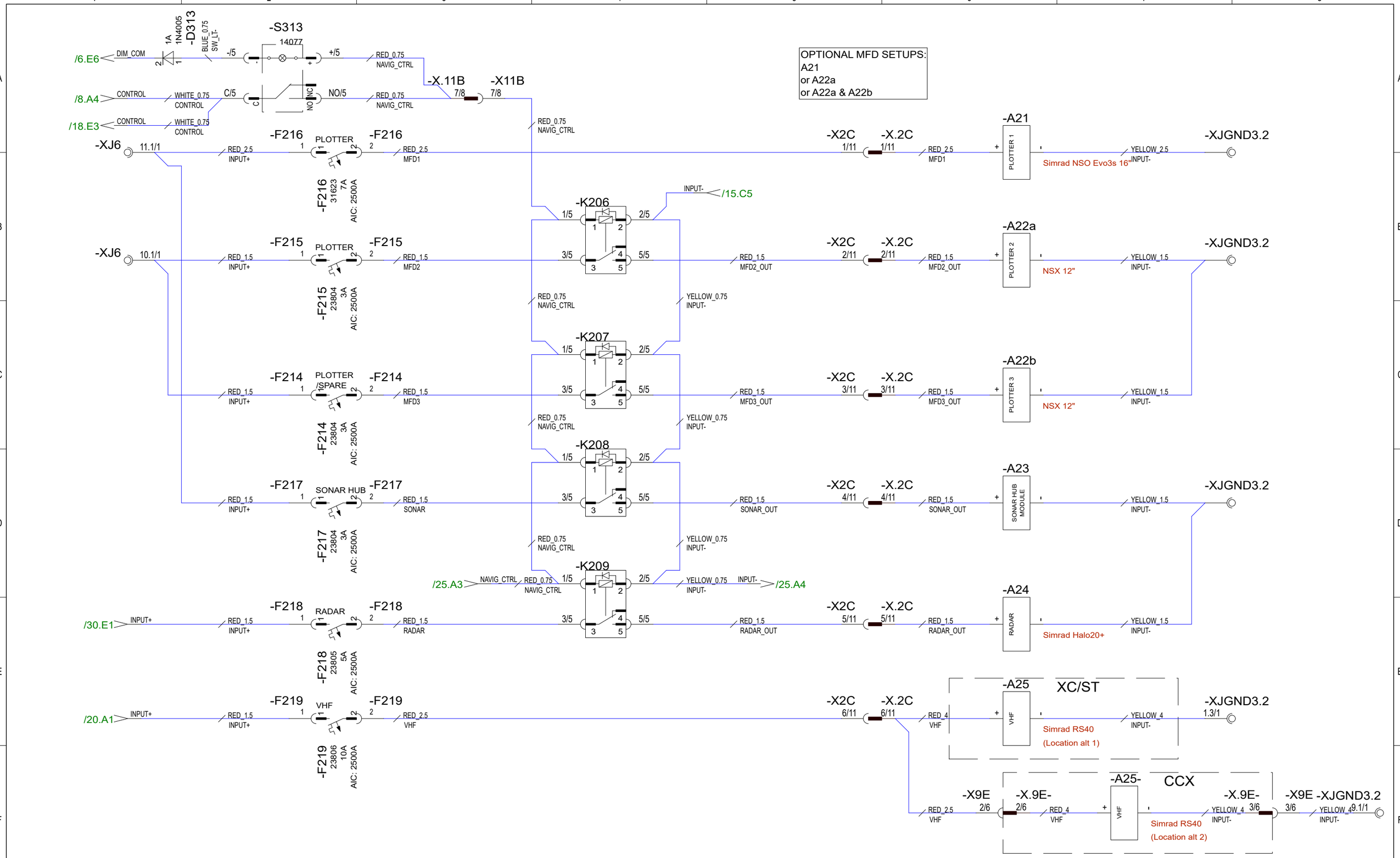

23.4.2024	PF	C5: 2005089;++: K206..K209 & S312 for nav eq., A25- alt. VHF loc in CCX	Date	22.3.2023	NAVIX	Axopar		DIAGRAM	2004468
8.8.2024	PF	C6: 2005089; Not modified	Drawing by	PF		Boat	Sub-product code	Product code	Project ID
1.10.2024	PF	C7: 2005259; Not modified	Sheet rev.	7		28 MK3	NAVIGATION & COMMUNICATION	HL	24 / 106
Date of modification	Modified by	Description	Project rev.	C	Copyright by	Boat model	Title	Loc	Sheet

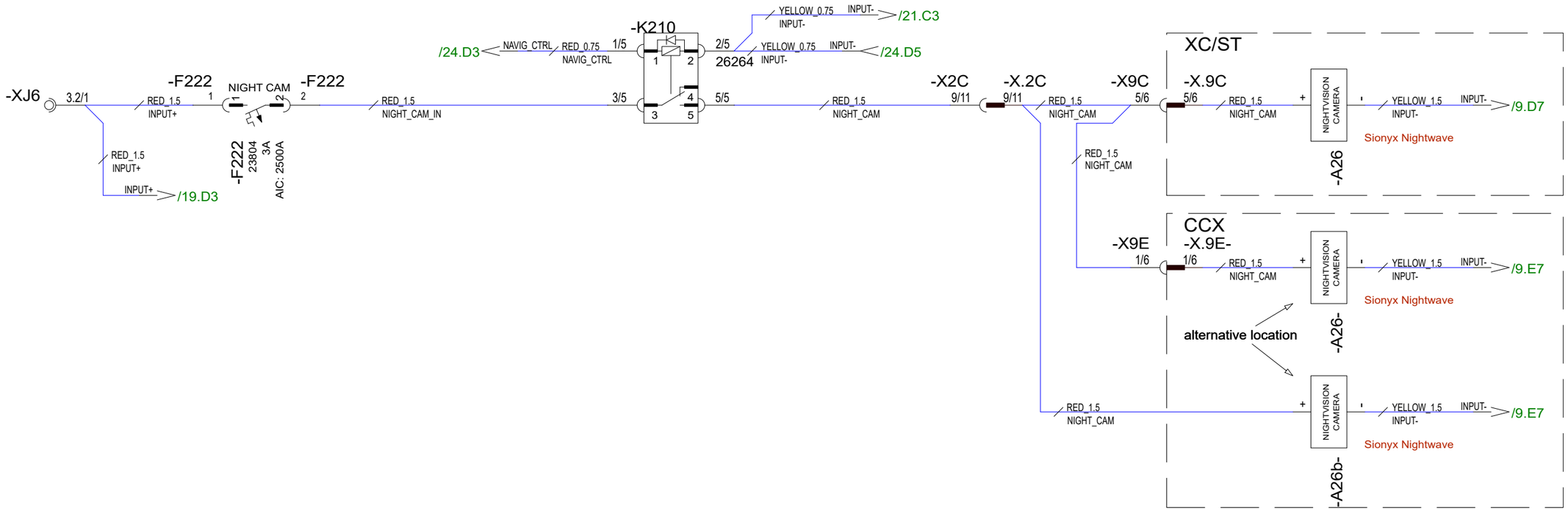

23.4.2024	PF	C5: 2005089; CCX reference and K210 added	Date	22.3.2023	NAVIX	Axopar		DIAGRAM	2004468
8.8.2024	PF	C6: 2005089; A26b- added, alt location for camera feed in CCX	Drawing by	PF		Boat	Sub-product code	Product code	Project ID
1.10.2024	PF	C7: 2005259; Not modified	Sheet rev.	7		28 MK3	CAMERA, BUS FEED	HL	25 / 106
Date of modification	Modified by	Description	Project rev.	C	Copyright by	Boat model	Title	Loc	Sheet

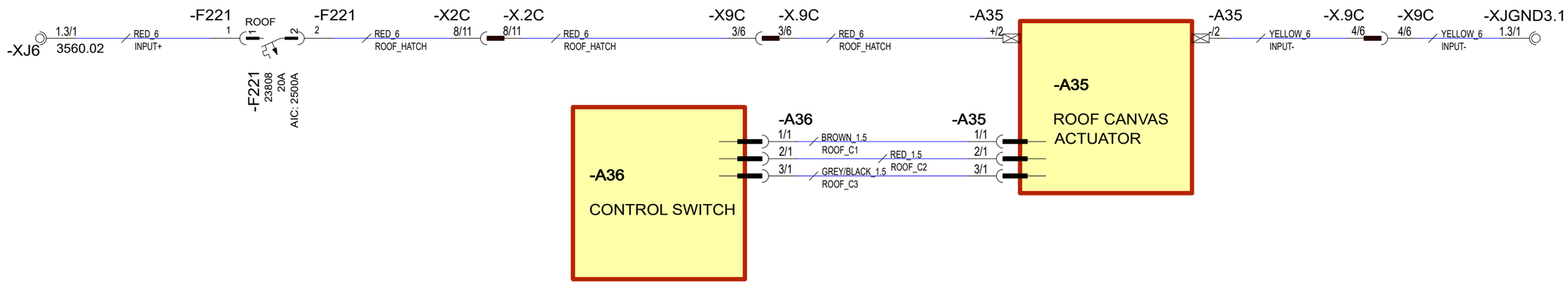

23.4.2024	PF	C5: 2005089; Not modified	Date	20.3.2023	NAVIX	Axopar		DIAGRAM	2004468
8.8.2024	PF	C6: 2005089; Not modified	Drawing by	PF		Boat	Sub-product code	Product code	Project ID
1.10.2024	PF	C7: 2005259; Not modified	Sheet rev.	7		28 MK3	ROOF	HL	26 / 106
Date of modification	Modified by	Description	Project rev.	C	Copyright by	Boat model	Title	Loc	Sheet

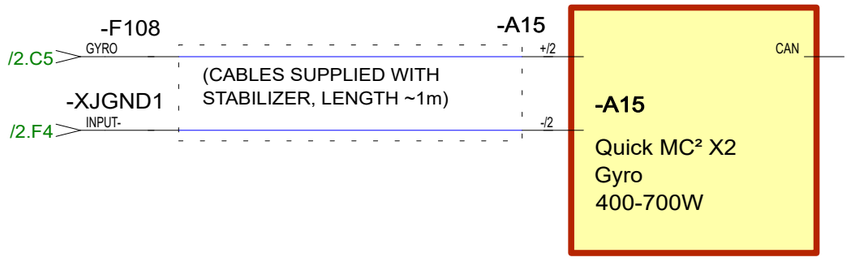

23.4.2024	PF	C5: 2005089; Not modified	Date 20.3.2023	NAVIX	Axopar		DIAGRAM	2004468
8.8.2024	PF	C6: 2005089; Not modified	Drawing by PF		Boat	Sub-product code	Product code	Project ID
1.10.2024	PF	C7: 2005259; Not modified	Sheet rev. 7		28 MK3	STABILIZER	HL	27 / 106
Date of modification	Modified by	Description	Project rev. C	Copyright by	Boat model	Title	Loc	Sheet

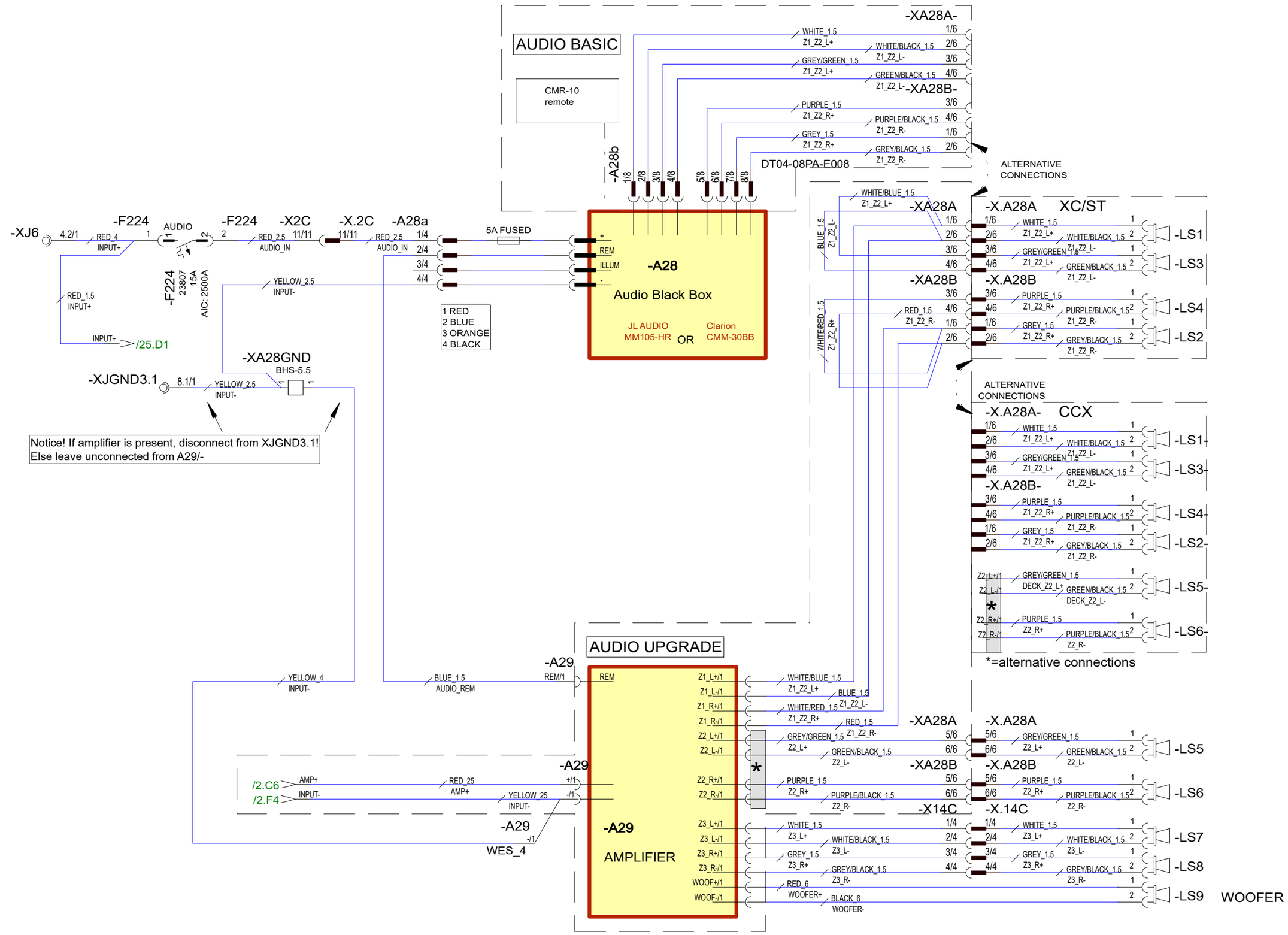

23.4.2024	PF	C5: 2005089; CCX reference added, option pages combined	Date	22.3.2023	NAVIX	Axopar		DIAGRAM	2004468
8.8.2024	PF	C6: 2005089; Not modified	Drawing by	PF		Boat	Sub-product code	Product code	Project ID
1.10.2024	PF	C7: 2005259; LS5-&LS6- (for CCX) added to deck harness	Sheet rev.	7		28 MK3	AUDIO SYSTEM	HL	28 / 106
Date of modification	Modified by	Description	Project rev.	C	Copyright by	Boat model	Title	Loc	Sheet

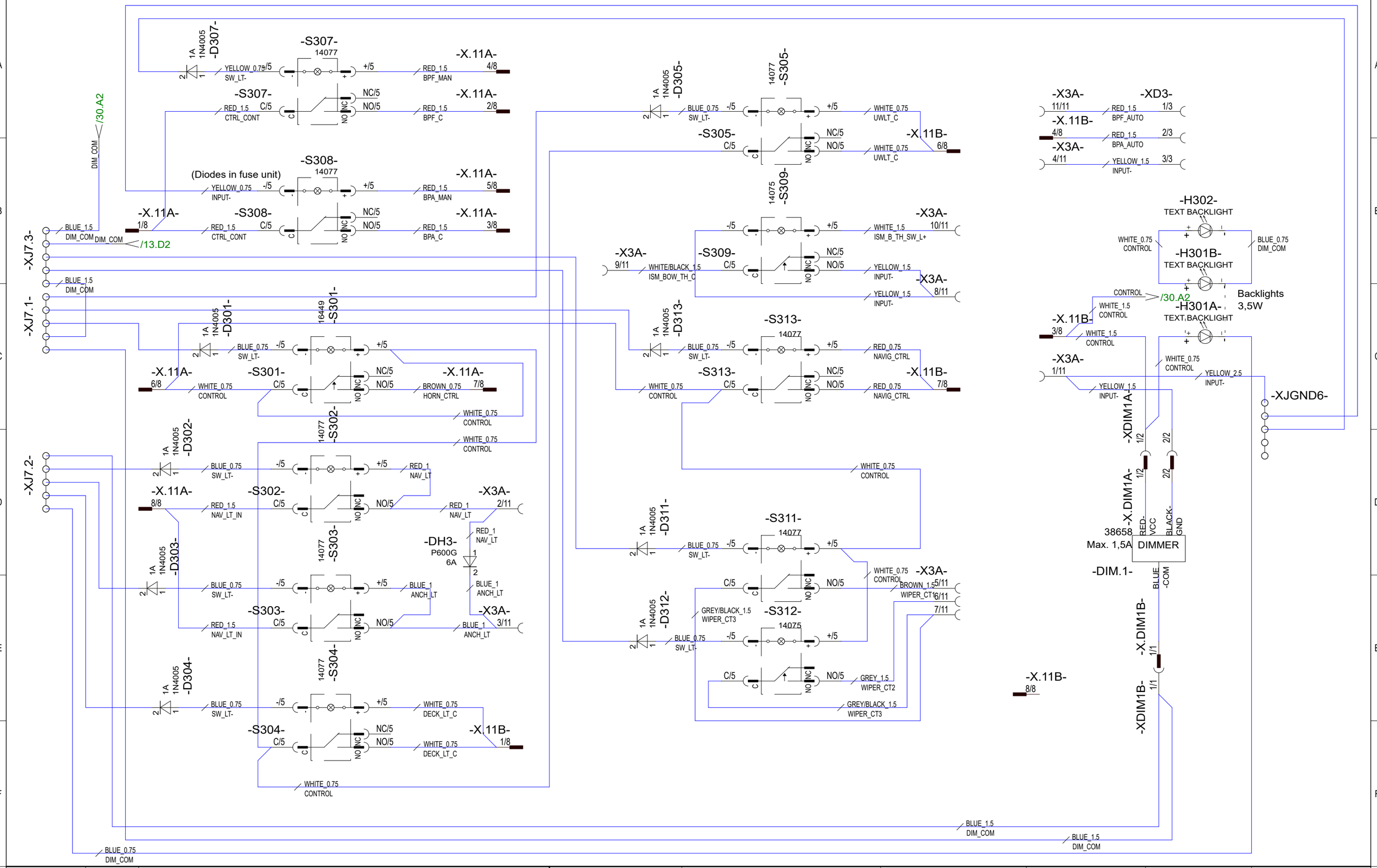

23.4.2024	PF	C5: 2005089; New page	Date	22.4.2024	NAVIX	Axopar		DIAGRAM	2004468
8.8.2024	PF	C6: 2005089; Not modified	Drawing by	PF		Boat	Sub-product code	Product code	Project ID
1.10.2024	PF	C7: 2005259; Not modified	Sheet rev.	7		28 MK3	LP SWITCH PANEL	HL	29 / 106
Date of modification	Modified by	Description	Project rev.	C	Copyright by	Boat model	Title	Loc	Sheet

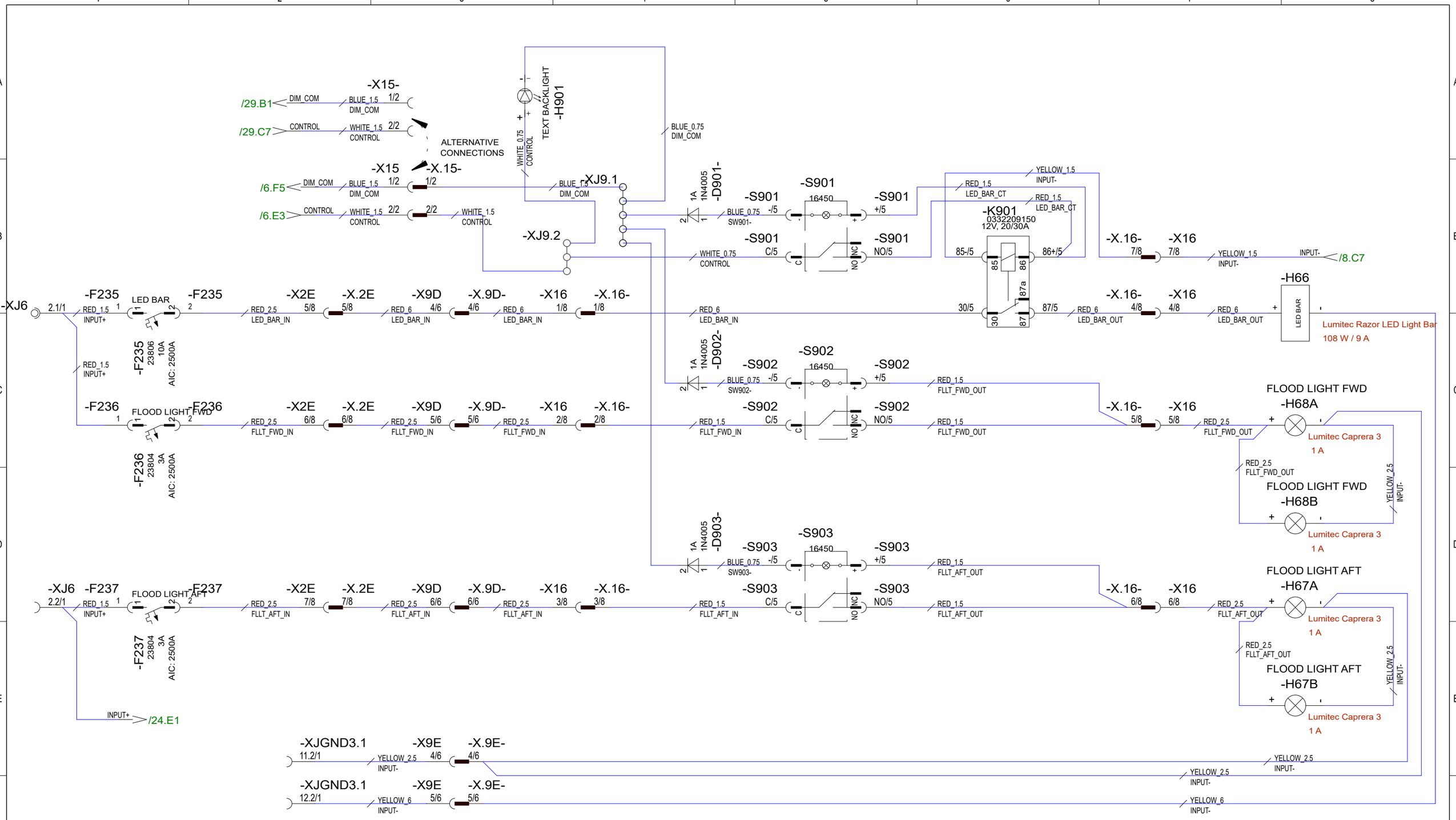

23.4.2024	PF	C5: 2005089; New page	Date	19.4.2024	NAVIX	Axopar		DIAGRAM	2004468
8.8.2024	PF	C6: 2005089; Not modified	Drawing by	PF		Boat	Sub-product code	Product code	Project ID
1.10.2024	PF	C7: 2005259; Not modified	Sheet rev.	7		28 MK3	CCX LIGHT CONTROL PANEL	HL	30 / 106
Date of modification	Modified by	Description	Project rev.	C	Copyright by	Boat model	Title	Loc	Sheet

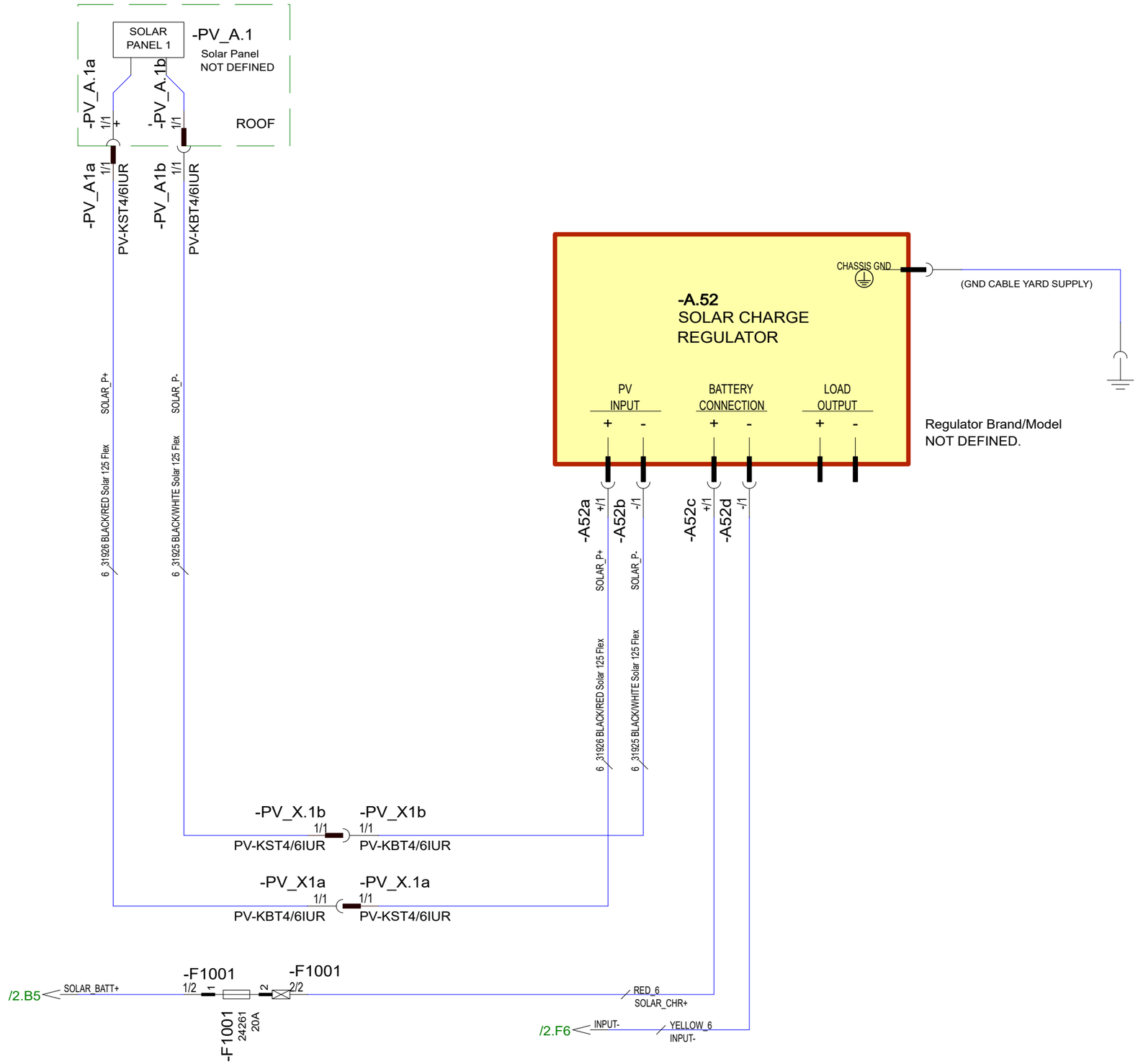

7.5.2024	PF	C5: 2005089; New page	Date	7.5.2024	NAVIX	Axopar		DIAGRAM	2004468
8.8.2024	PF	C6: 2005089; Not modified	Drawing by	PF		Boat	Sub-product code	Product code	Project ID
1.10.2024	PF	C7: 2005259; Not modified	Sheet rev.	7		28 MK3	SOLAR CHARGE REGULATOR	HL	31/ 106
Date of modification	Modified by	Description	Project rev.	C	Copyright by	Boat model	Title	Loc	Sheet

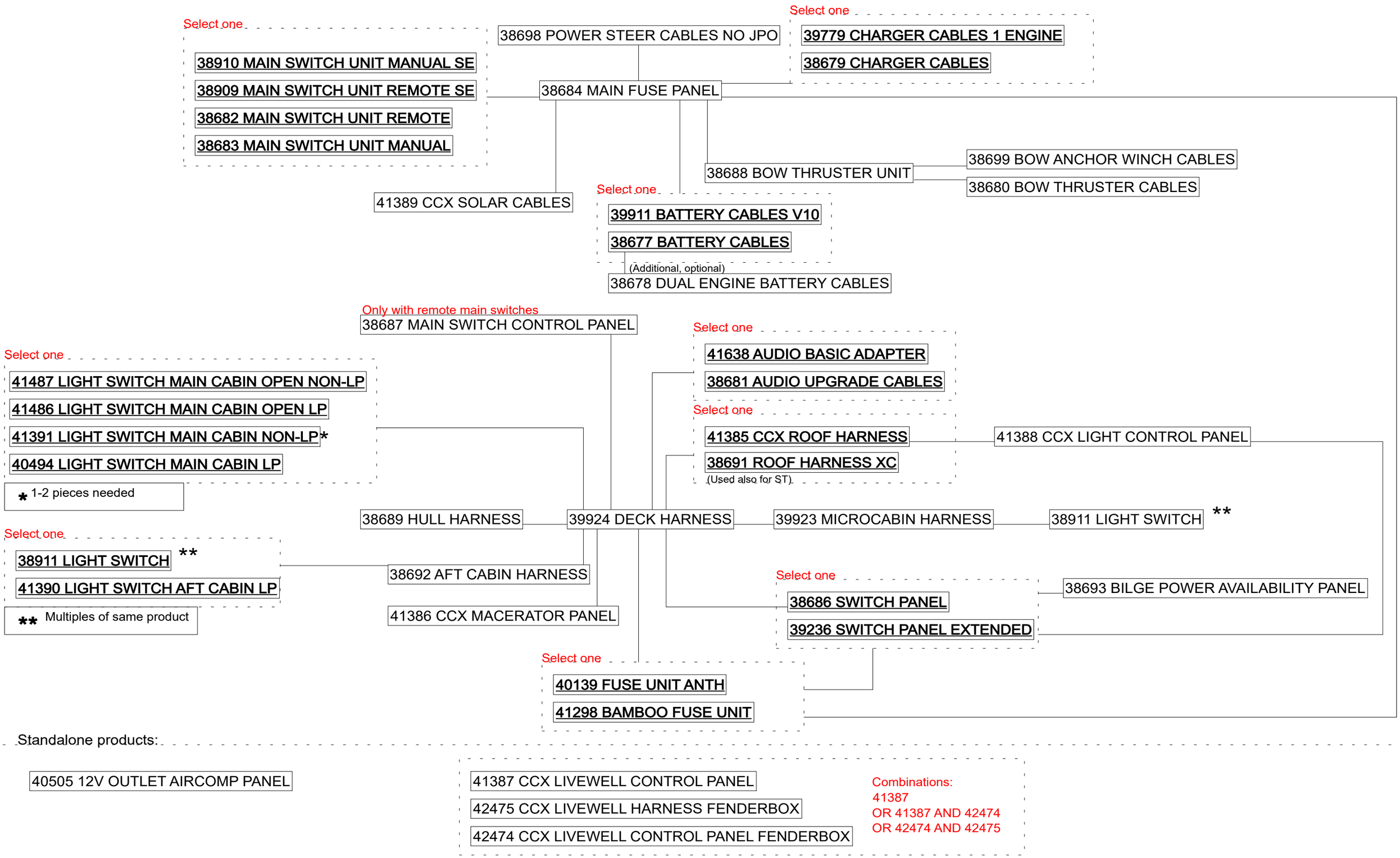

Date of modification	Modified by	Description
27.5.2024	PF	C5: 2005089; New page
8.8.2024	PF	C6: 2005089; Structure updated
1.10.2024	PF	C7: 2005259; Structure updated

Date	30.4.2024
Drawing by	PF
Sheet rev.	7
Project rev.	C

NAVIX
Copyright by

Axopar		DIAGRAM	2004468
Boat	Sub-product code	Product code	Project ID
28 MK3	PRODUCT STRUCTURE	HL	32 / 106
Boat model	Title	Loc	Sheet

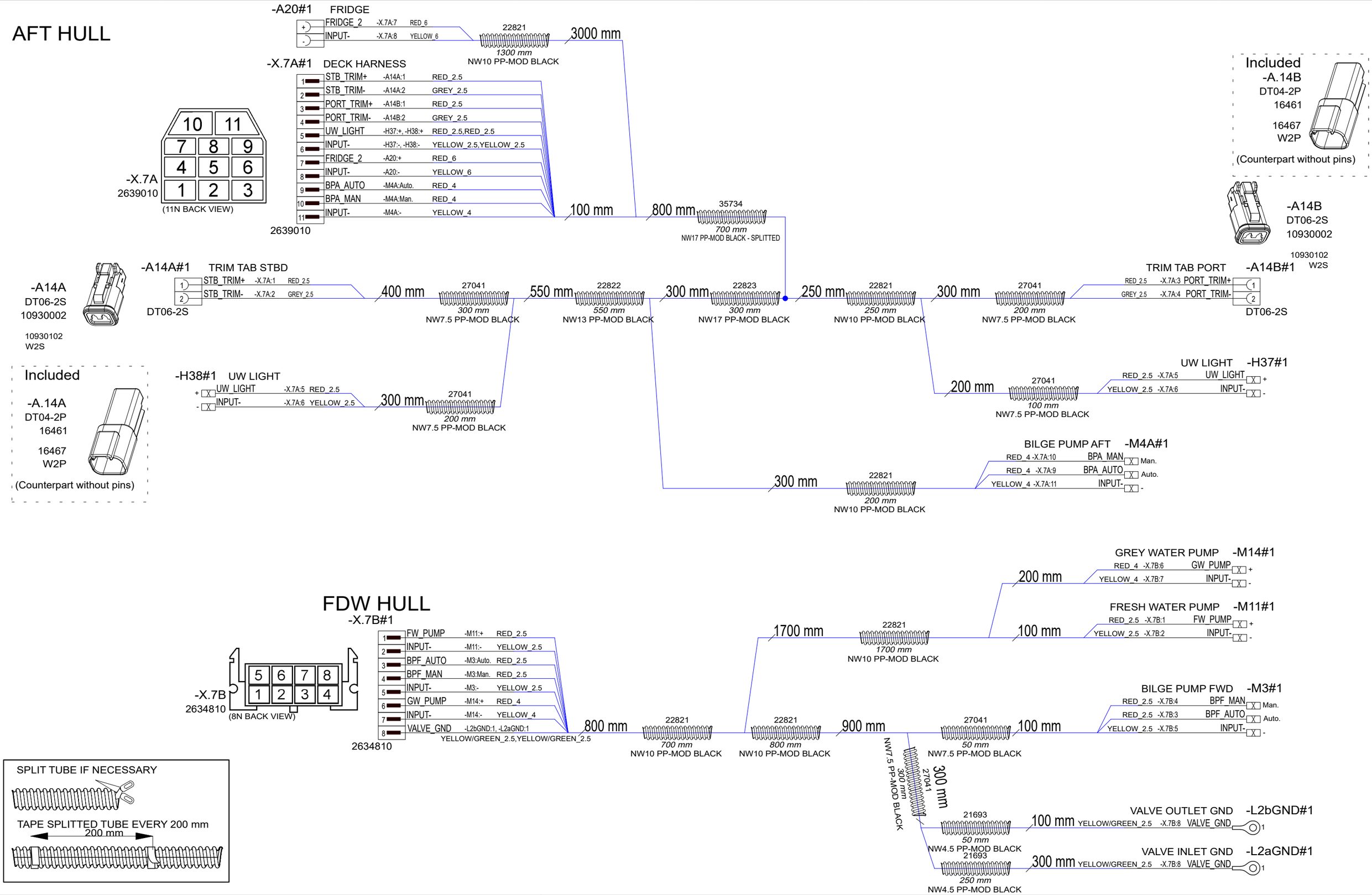

Date of modification	Modified by	Description
8.5.2024	PF	C4: 2005089; A20, M14 & trim tab counter connectors added
8.8.2024	PF	C5: 2005089; Length changes
14.10.2024	PF	C6: 2005259; Valve gnds added, fridge moved

Date	6.4.2023
Drawing by	PF
Sheet rev.	6
Project rev.	C

NAVIX
Copyright by

Axopar		38689	2004468
Boat	Sub-product code	Product code	Project ID
28 MK3	HULL HARNESS	HL	33 / 106
Boat model	Title	Loc	Sheet

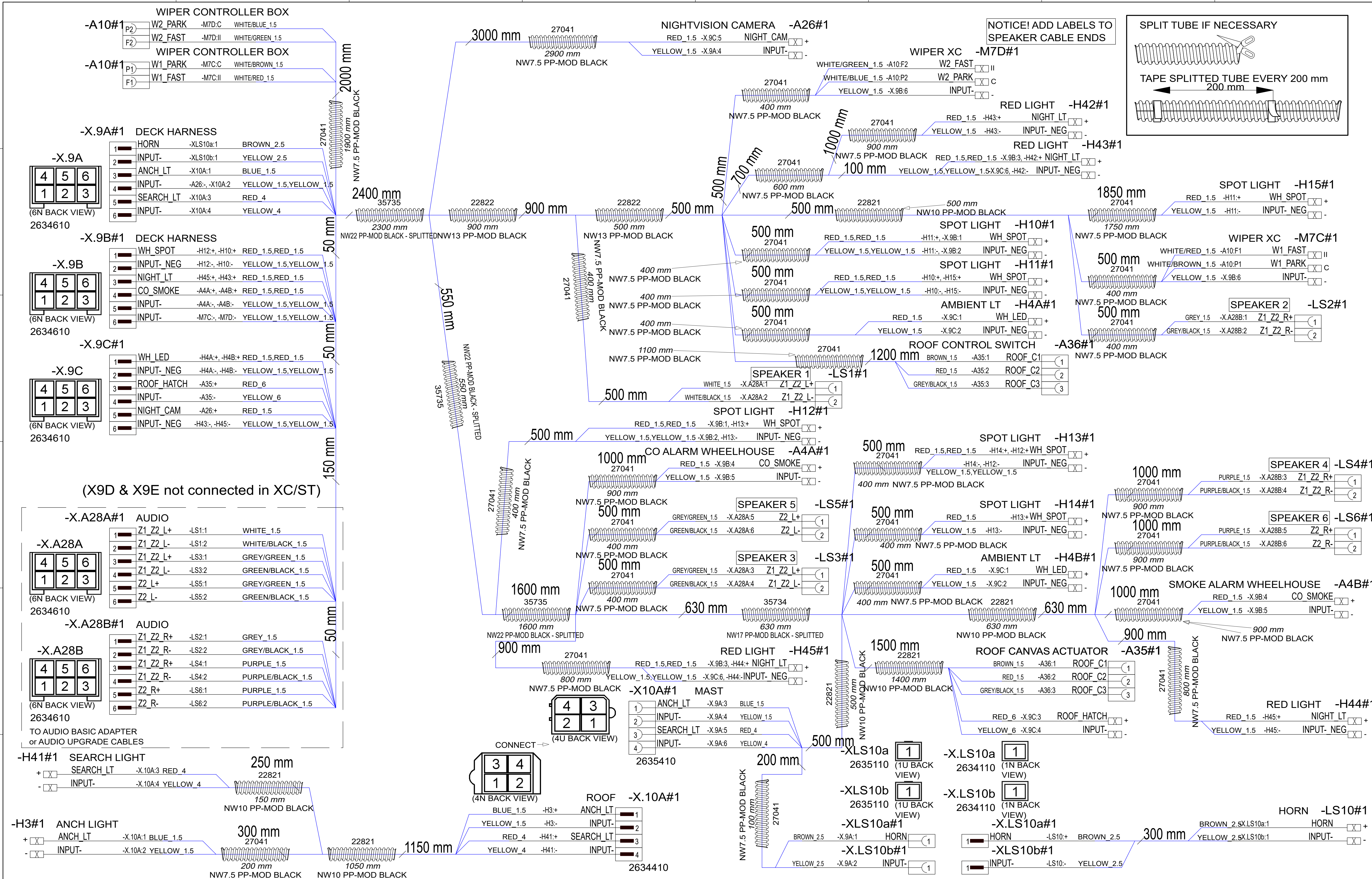

8.8.2024	PF	C5: 2005089; Mast harness: X10B removed, XLS10 added
7.10.2024	PF	C6: 2005259; H10&H11->spot lt, H42-H45 added, lt naming changed
13.5.2024	PF	C4: 2005089; Second wiper added, CCX adaptations
Date of modification	Modified by	Description

Date 22.3.2023
Drawing by PF
Sheet rev. 6
Project rev. C

NAVIX
Copyright by

Axopar Boat	Sub-product code	38691 Product code	2004468 Project ID
28 MK3 Boat model	ROOF HARNESS XC Title	HL Loc	34 / 106 Sheet

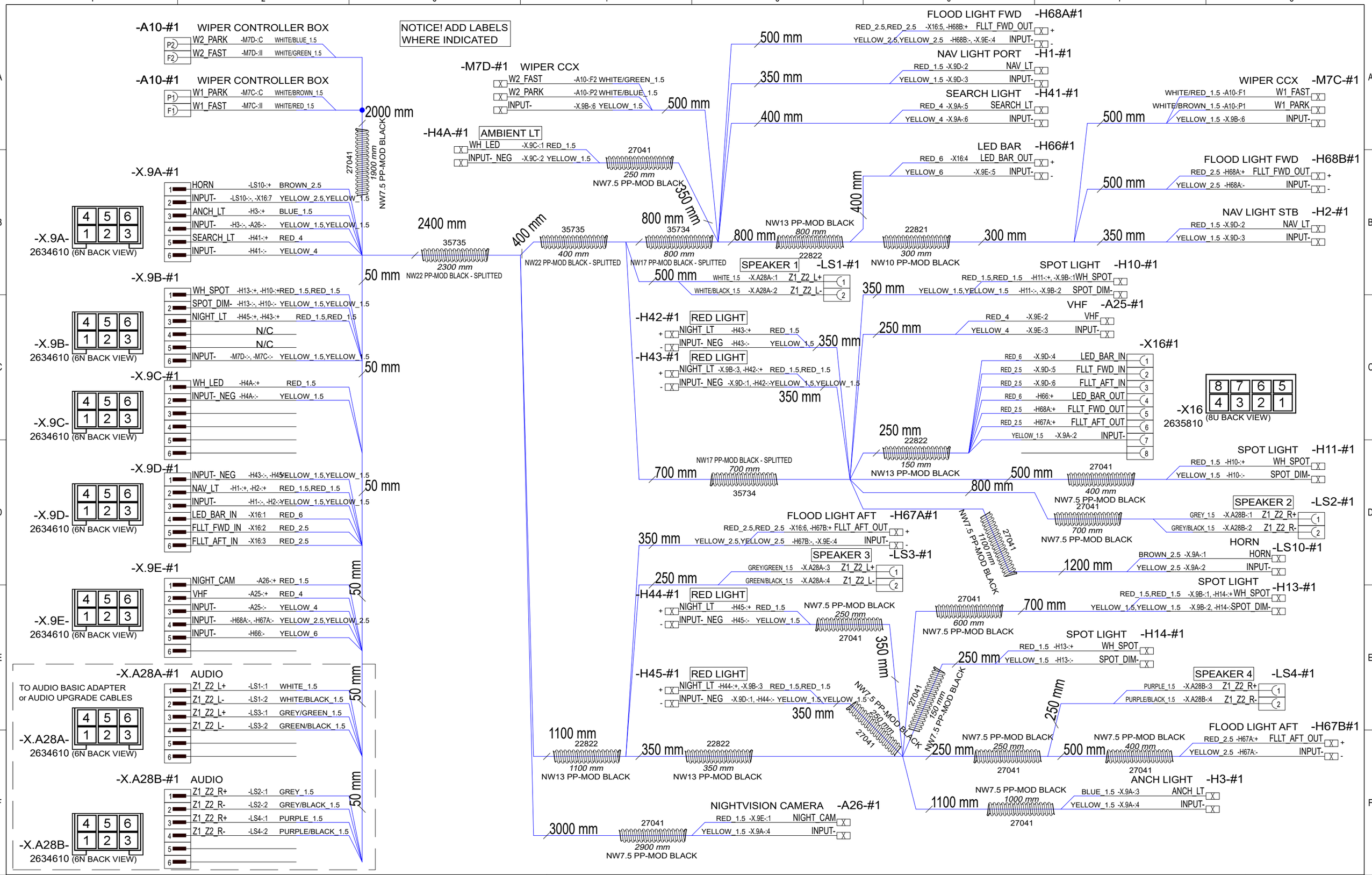

6.5.2024	PF	C1: 2005089; New product	Date	19.4.2024	NAVIX	Axopar		41385	2004468
14.10.2024	PF	C2: 2005259; H42-H45, H4A added, conduit changes	Drawing by	PF		Boat	Sub-product code	Product code	Project ID
			Sheet rev.	2		28 MK3	CCX ROOF HARNESS	HL	35 / 106
Date of modification	Modified by	Description	Project rev.	C	Copyright by	Boat model	Title	Loc	Sheet

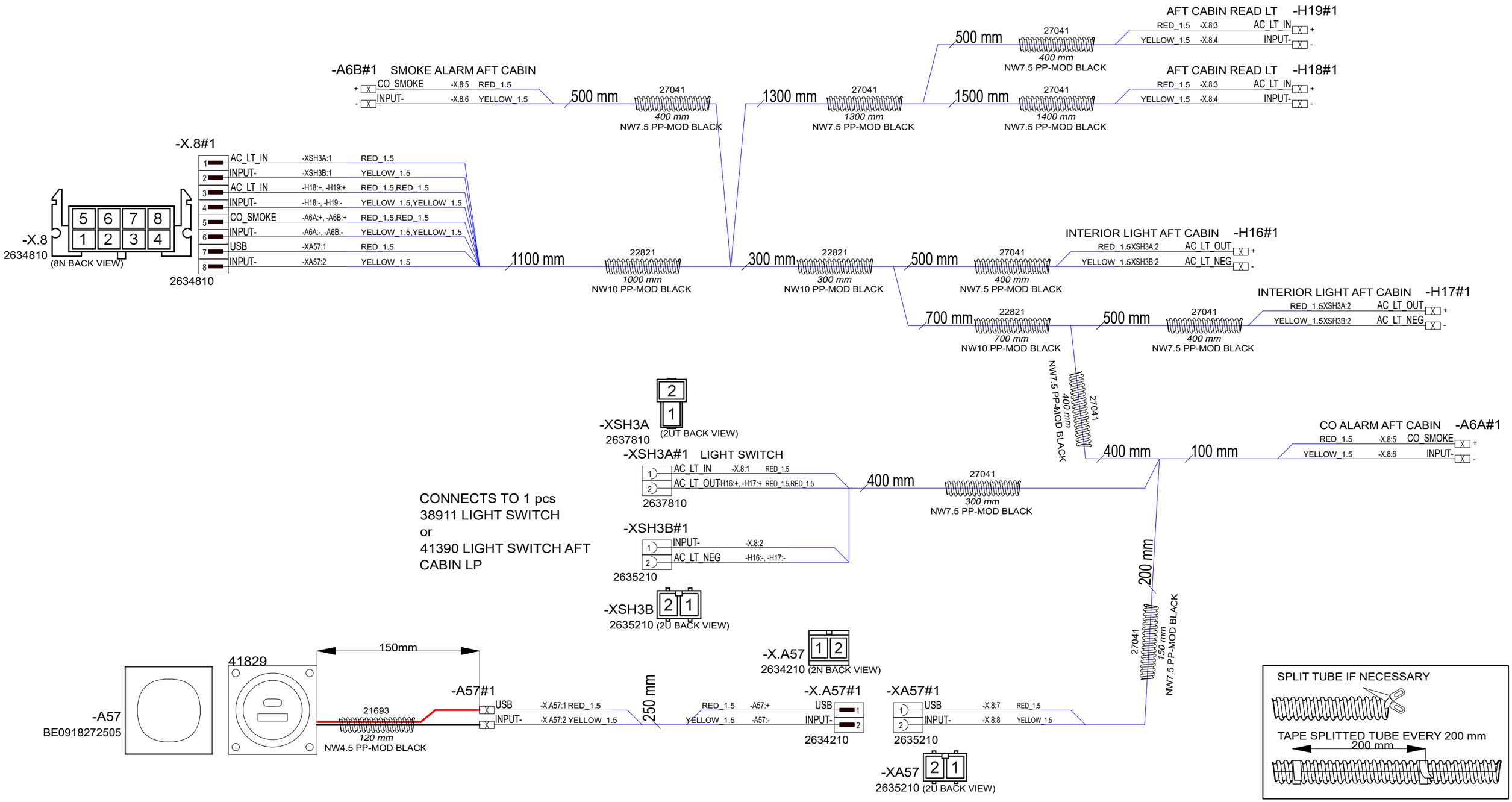

14.10.2024	PF	C5: 2005259; Branch & length changes, USB added	Date	27.3.2023	NAVIX	Axopar		38692	2004468
8.2.2024	PF	B3: 2005013; Added conduits	Drawing by	PF		Boat	Sub-product code	Product code	Project ID
26.4.2024	PF	C4: 2005089; XSH3 -> XSH3A & XSH3B (Light pack modification)	Sheet rev.	5		28 MK3	AFT CABIN HARNESS	HL	36 / 106
Date of modification	Modified by	Description	Project rev.	C	Copyright by	Boat model	Title	Loc	Sheet

CONNECTS TO FOLLOWING

39923 MICRO CABIN HARNESS (1-2 PCS)

38292 AFT CABIN HARNESS (1 PCS)

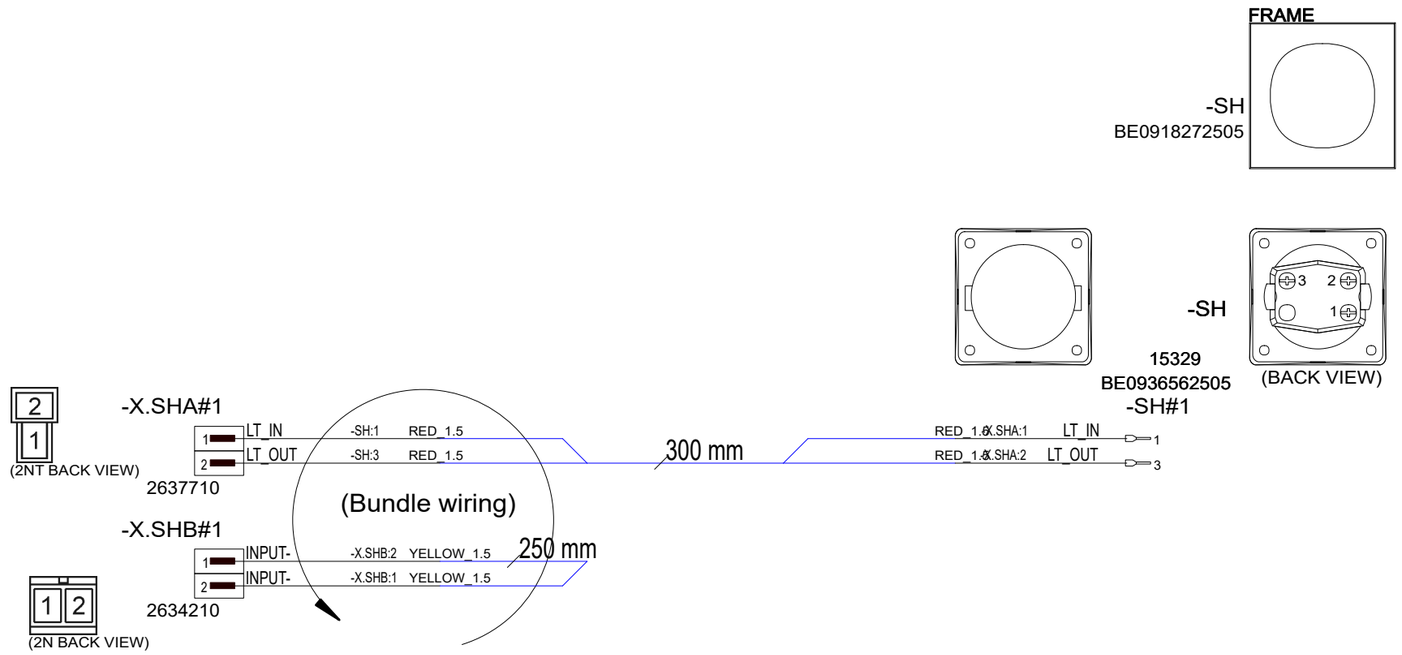

Customer: Only connect -X.SHB when product used in aft cabin. In multicabin leave unconnected.

Date of modification	Modified by	Description
9.2.2024	PF	B1: 2004980, 2004968 - no effect
26.4.2024	PF	C2: 2005089; Minus wire & B-connector added, wire color changed

Date	26.4.2023
Drawing by	PF
Sheet rev.	2
Project rev.	C

NAVIX

Copyright by

Axopar Boat	Sub-product code	38911 Product code	2004468 Project ID
28 MK3 Boat model	LIGHT SWITCH Title	HL Loc	37 / 106 Sheet

CONNECTS TO FOLLOWING

38692 AFT CABIN HARNESS 1 pcs

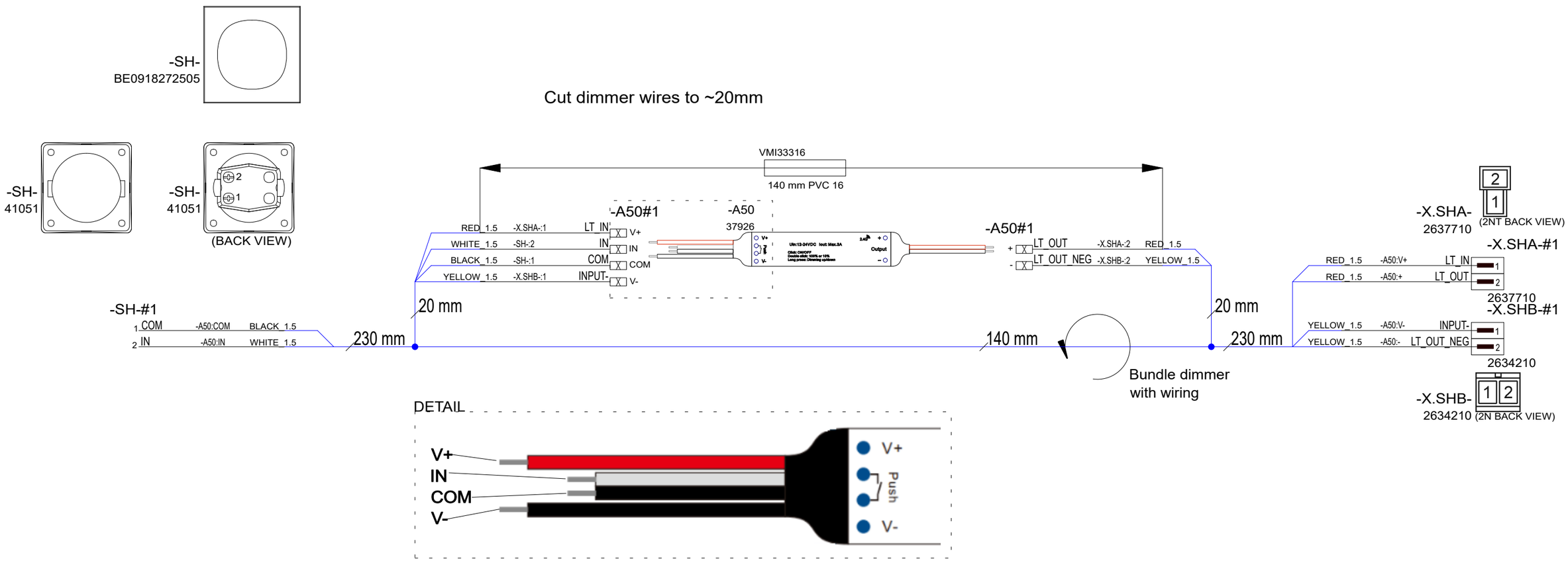

30.4.2024	PF	C1: 2005089; New product	Date	26.4.2024	NAVIX	Axopar		41390	2004468
			Drawing by	PF		Boat	Sub-product code	Product code	Project ID
			Sheet rev.	1		28 MK3	LIGHT SWITCH AFT CABIN LP	HL	38 / 106
Date of modification	Modified by	Description	Project rev.	C	Copyright by	Boat model	Title	Loc	Sheet

CONNECTS TO FOLLOWING

39924 DECK HARNESS 1 pcs

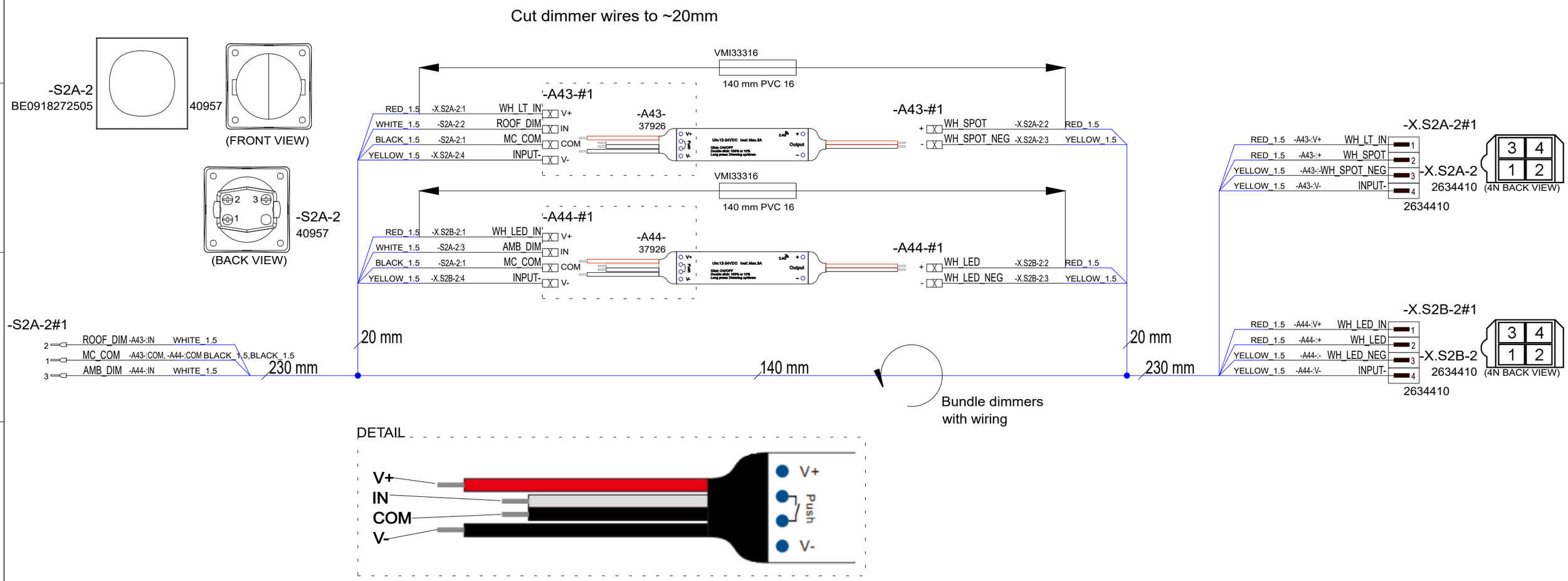

26.4.2024	PF	C1: 2005089; New product	Date	13.12.2023	NAVIX	Axopar		40494	2004468
			Drawing by	PF		Boat	Sub-product code	Product code	Project ID
			Sheet rev.	1		28 MK3	LIGHT SWITCH MAIN CABIN LP	HL	39 / 106
Date of modification	Modified by	Description	Project rev.	C	Copyright by	Boat model	Title	Loc	Sheet

CONNECTS TO FOLLOWING

39924 DECK HARNESS (1-2 pcs)

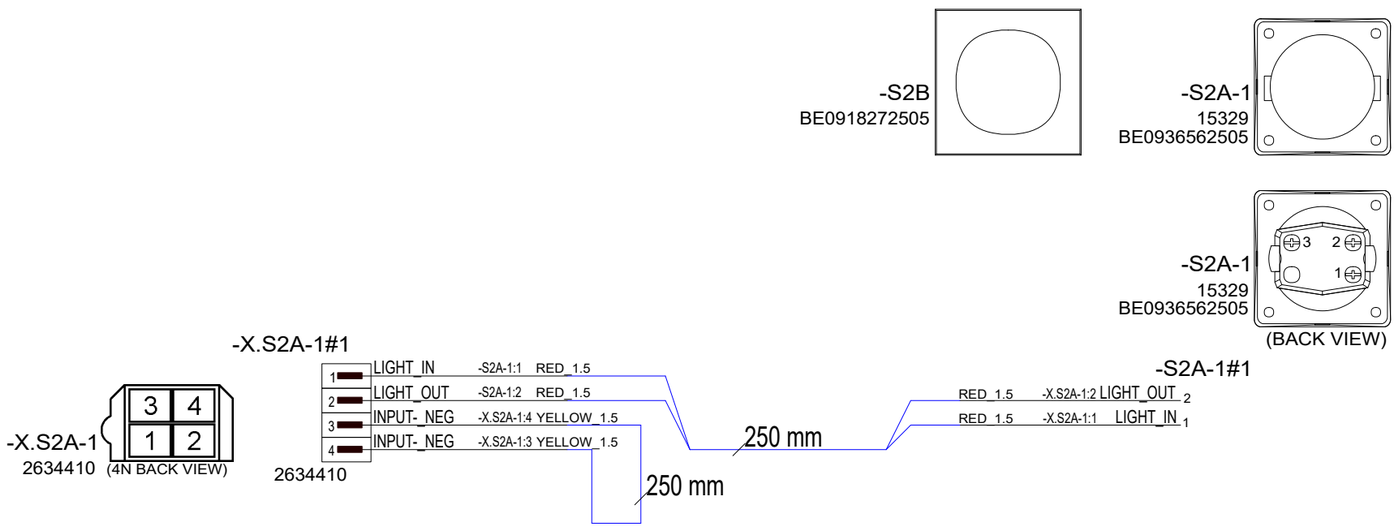

30.4.2024	PF	C1: 2005089; New product	Date	26.4.2024	NAVIX	Axopar		41391	2004468
			Drawing by	PF		Boat	Sub-product code	Product code	Project ID
			Sheet rev.	1		28 MK3	LIGHT SWITCH MAIN CABIN NON-LP	HL	40 / 106
Date of modification	Modified by	Description	Project rev.	C	Copyright by	Boat model	Title	Loc	Sheet

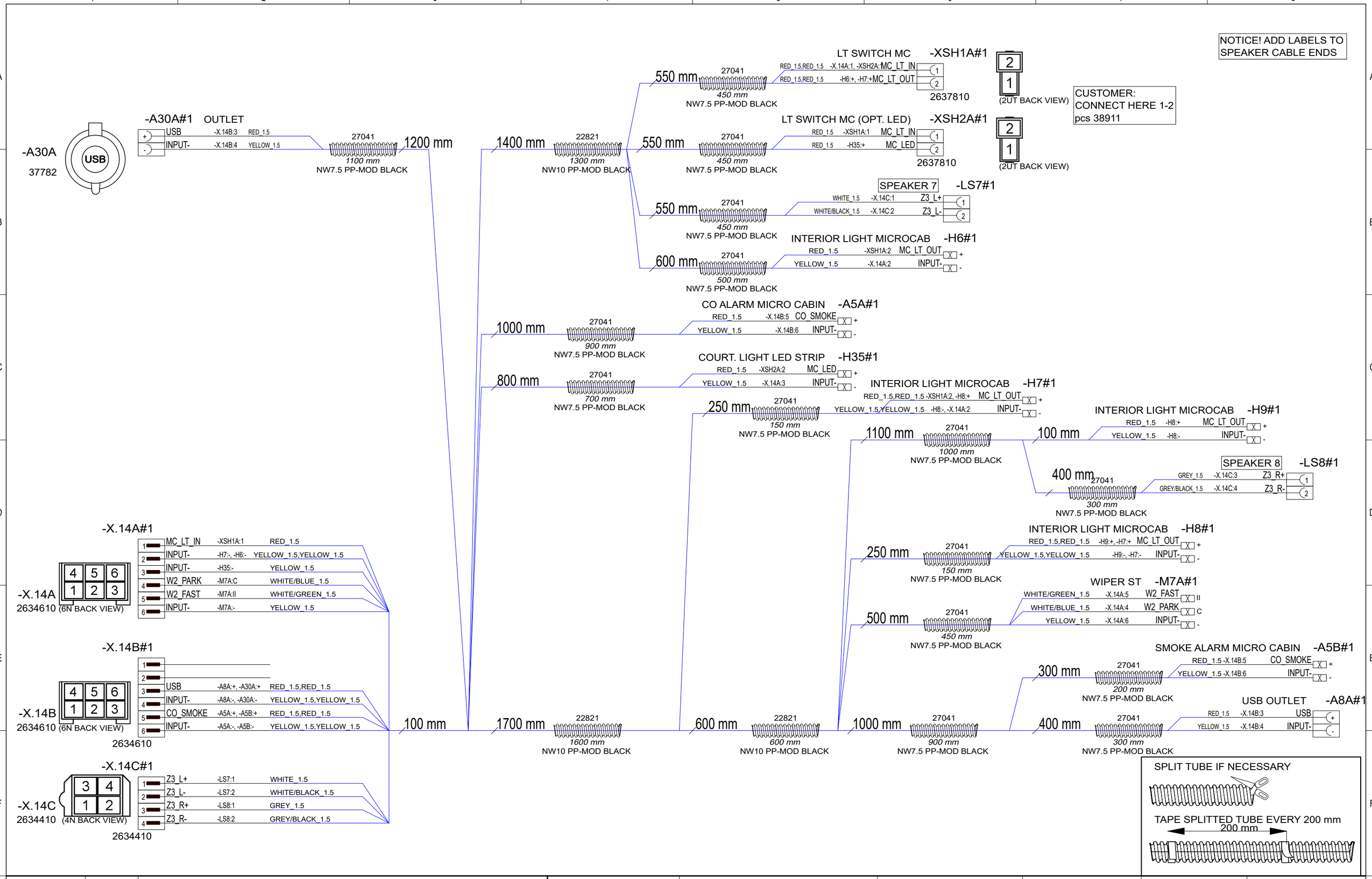

30.4.2024	PF	C3: 2005089; Speaker labels, removed deck lights, length&branch changes	Date	29.9.2023	NAVIX	Axopar		
9.8.2024	PF	C4: 2005089; X14 length 500->100	Drawing by	PF		Boat	Sub-product code	39923 Product code	2004468 Project ID
17.10.2024	PF	C5: 2005259; Lenght changes, A30A type changed	Sheet rev.	5		28 MK3	MICROCABIN HARNESS	HL
Date of modification	Modified by	Description	Project rev.	C	Copyright by	Boat model	Title	Loc	41/ 106 Sheet

DECK HARNESS - GENERAL LAYOUT

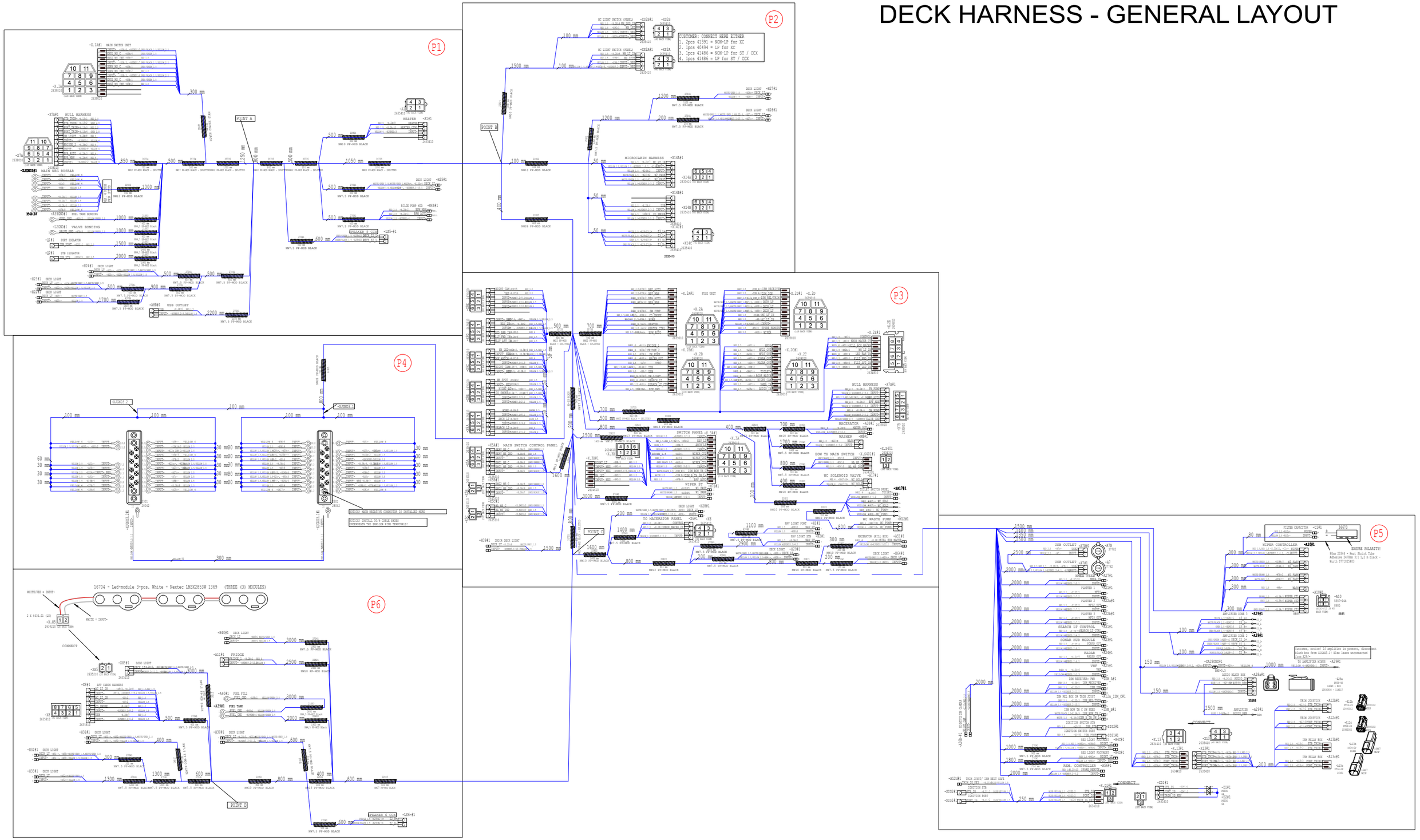

30.4.2024	PF	C4: 2005089; Light pack, branch and length changes	Date	24.4.2023	NAVIX	Axopar		39924	2004468
8.8.2024	PF	C5: 2005089; Night cam, length changes	Drawing by	PF		Boat	Sub-product code	Product code	Project ID
7.10.2024	PF	C6: 2005259; A29 Z2, WES, A29/-, C1 added, A7&A7B ->usb	Sheet rev.	6		28 MK3	DECK HARNESS	HL	42 / 106
Date of modification	Modified by	Description	Project rev.	C	Copyright by	Boat model	Title	Loc	Sheet

NOTE! BOXED TEXTS : MAKE A LABEL AND ATTACH TO SHOWN LOCATION

P1

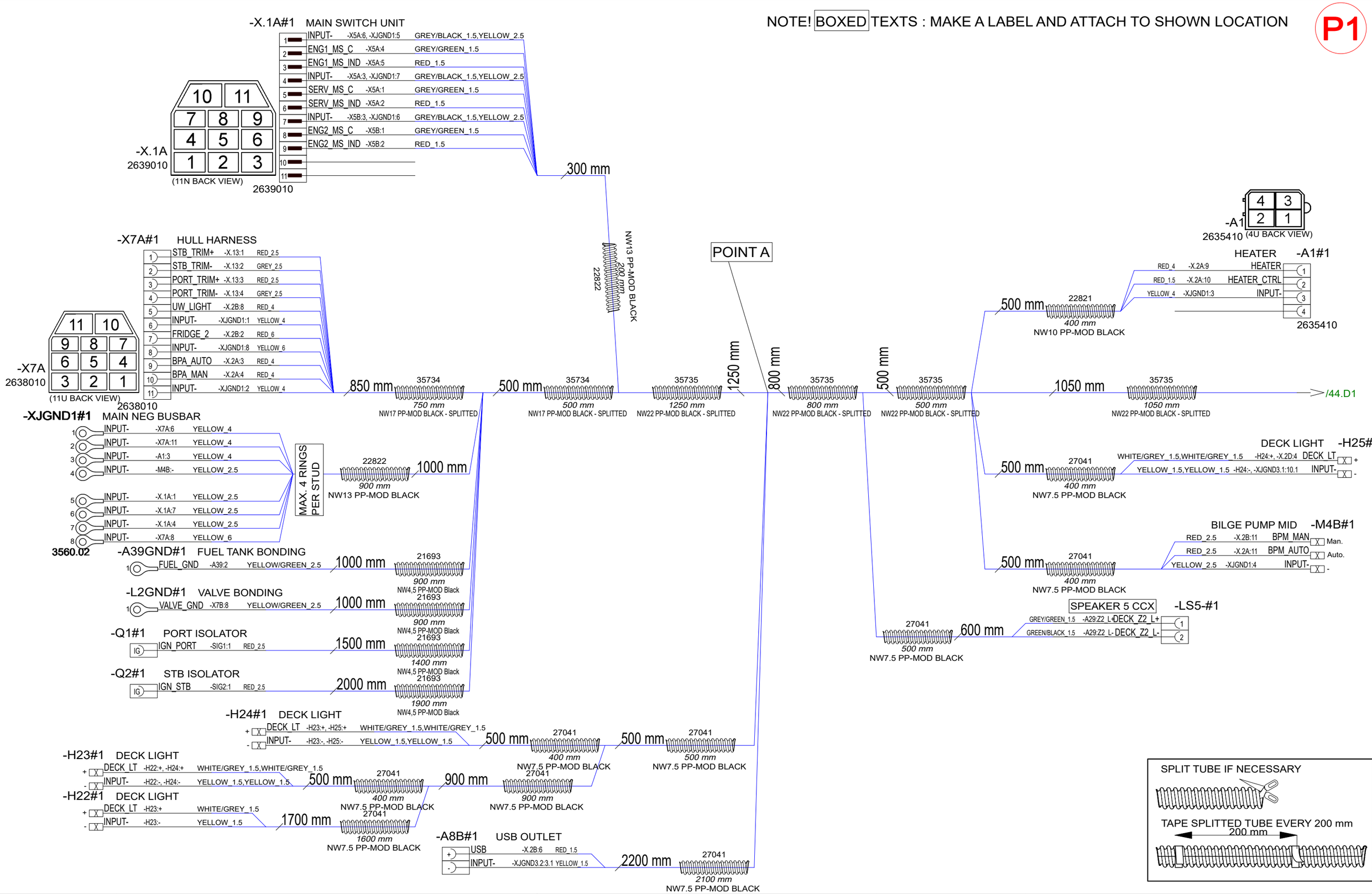

30.4.2024	PF	C4: 2005089; Light pack, branch and length changes	Date	24.4.2023	NAVIX	Axopar		39924 / 2004468
8.8.2024	PF	C5: 2005089; Night cam, length changes	Drawing by	PF		Boat	Sub-product code / Product code	Project ID
7.10.2024	PF	C6: 2005259; A29 Z2, WES, A29/-, C1 added, A7&A7B ->usb	Sheet rev.	6		28 MK3	DECK HARNESS	HL
Date of modification	Modified by	Description	Project rev.	C	Copyright by	Boat model	Title	Loc / Sheet 43 / 106

P2

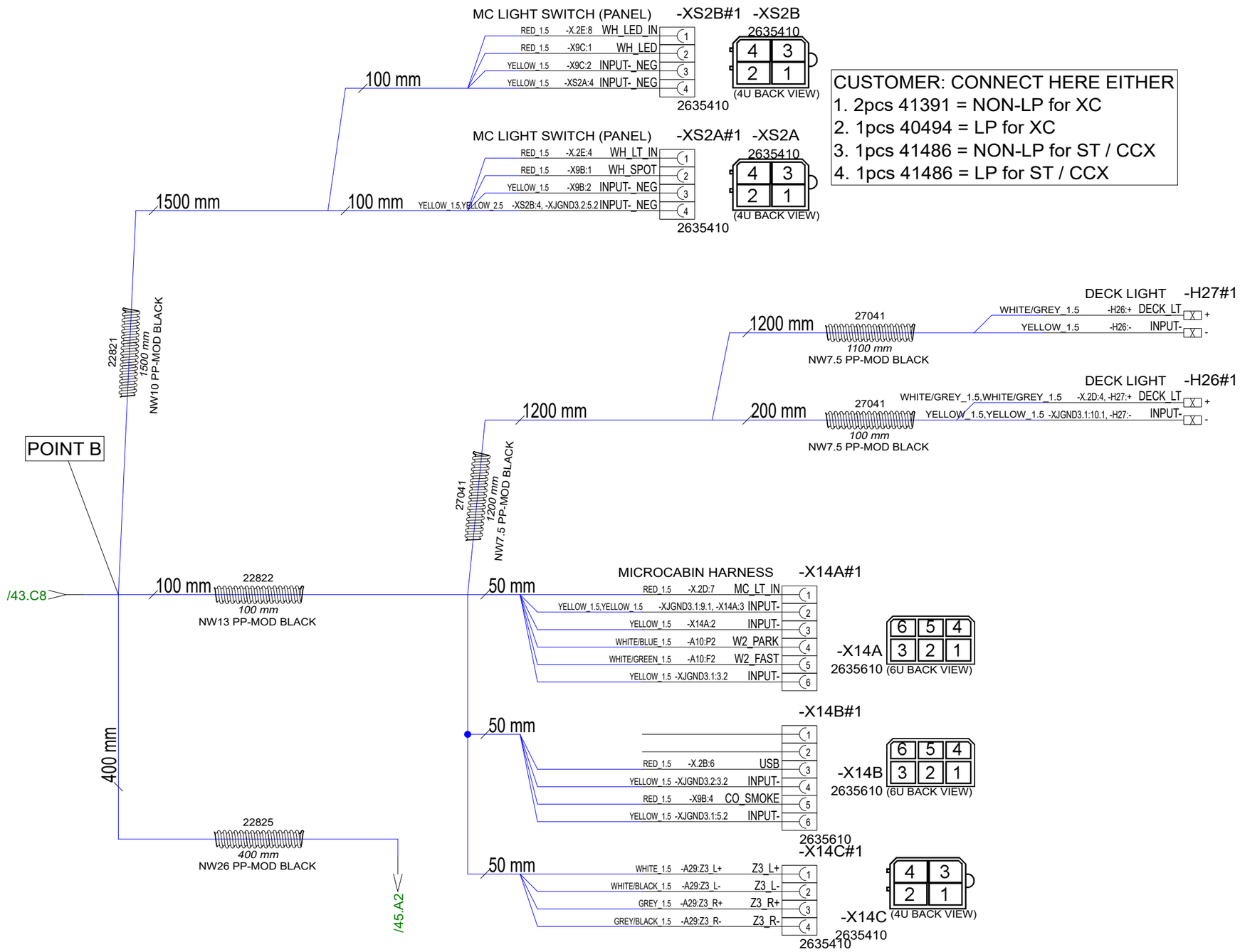

30.4.2024	PF	C4: 2005089; Light pack, branch and length changes	Date	24.4.2023	NAVIX	Axopar		39924	2004468
8.8.2024	PF	C5: 2005089; Night cam, length changes	Drawing by	PF		Boat	Sub-product code	Product code	Project ID
7.10.2024	PF	C6: 2005259; A29 Z2, WES, A29/-, C1 added, A7&A7B ->usb	Sheet rev.	6		28 MK3	DECK HARNESS	HL	44 / 106
Date of modification	Modified by	Description	Project rev.	C	Copyright by	Boat model	Title	Loc	Sheet

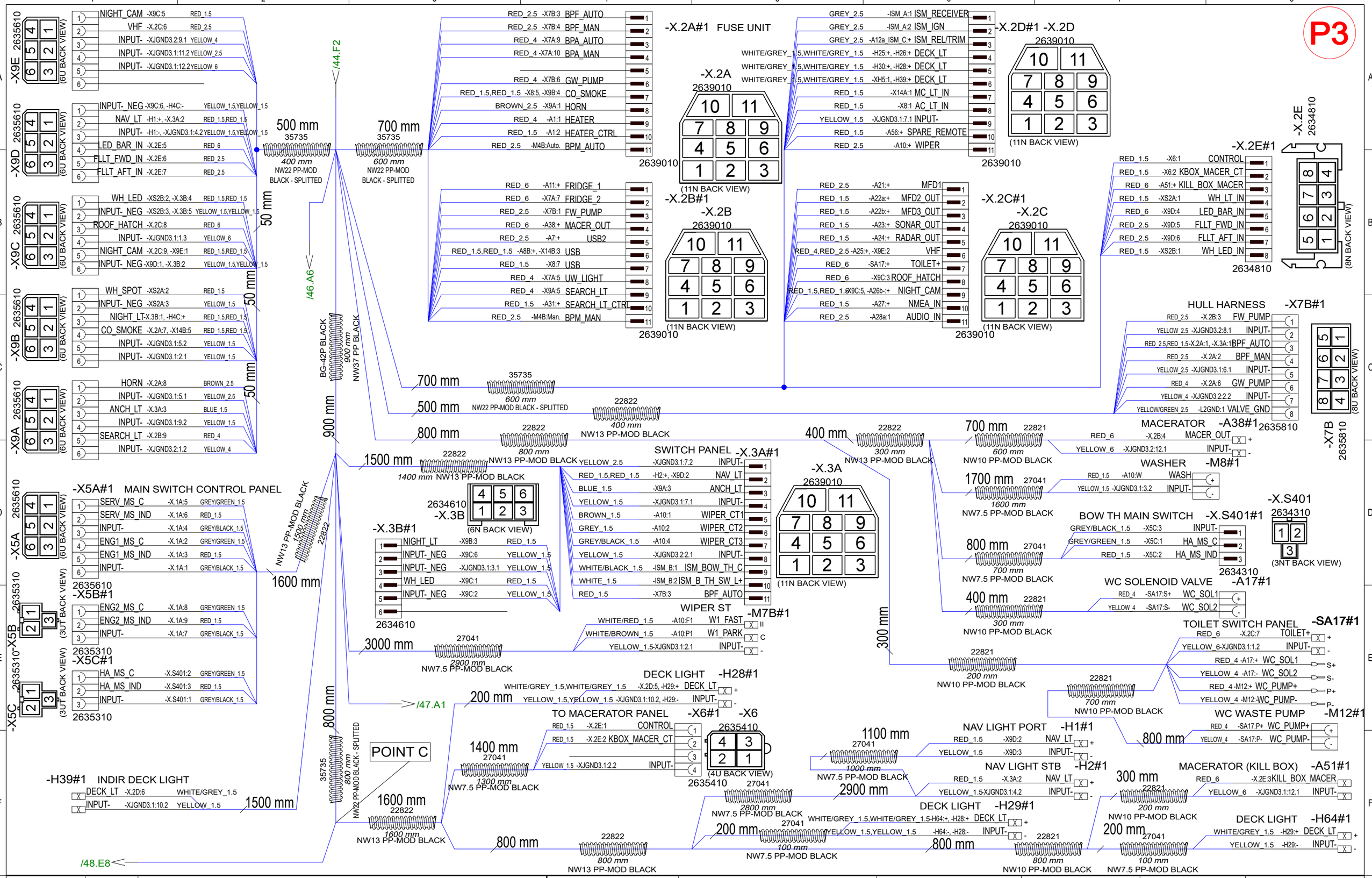

30.4.2024	PF	C4: 2005089; Light pack, branch and length changes	Date 24.4.2023	NAVIX	Axopar		39924 / 2004468
8.8.2024	PF	C5: 2005089; Night cam, length changes	Drawing by PF		Boat	Sub-product code	Product code / Project ID
7.10.2024	PF	C6: 2005259; A29 Z2, WES, A29/-, C1 added, A7&A7B ->usb	Sheet rev. 6		28 MK3	DECK HARNESS	HL
Date of modification	Modified by	Description	Project rev. C	Copyright by	Boat model	Title	Loc / 45 / 106 Sheet

P4

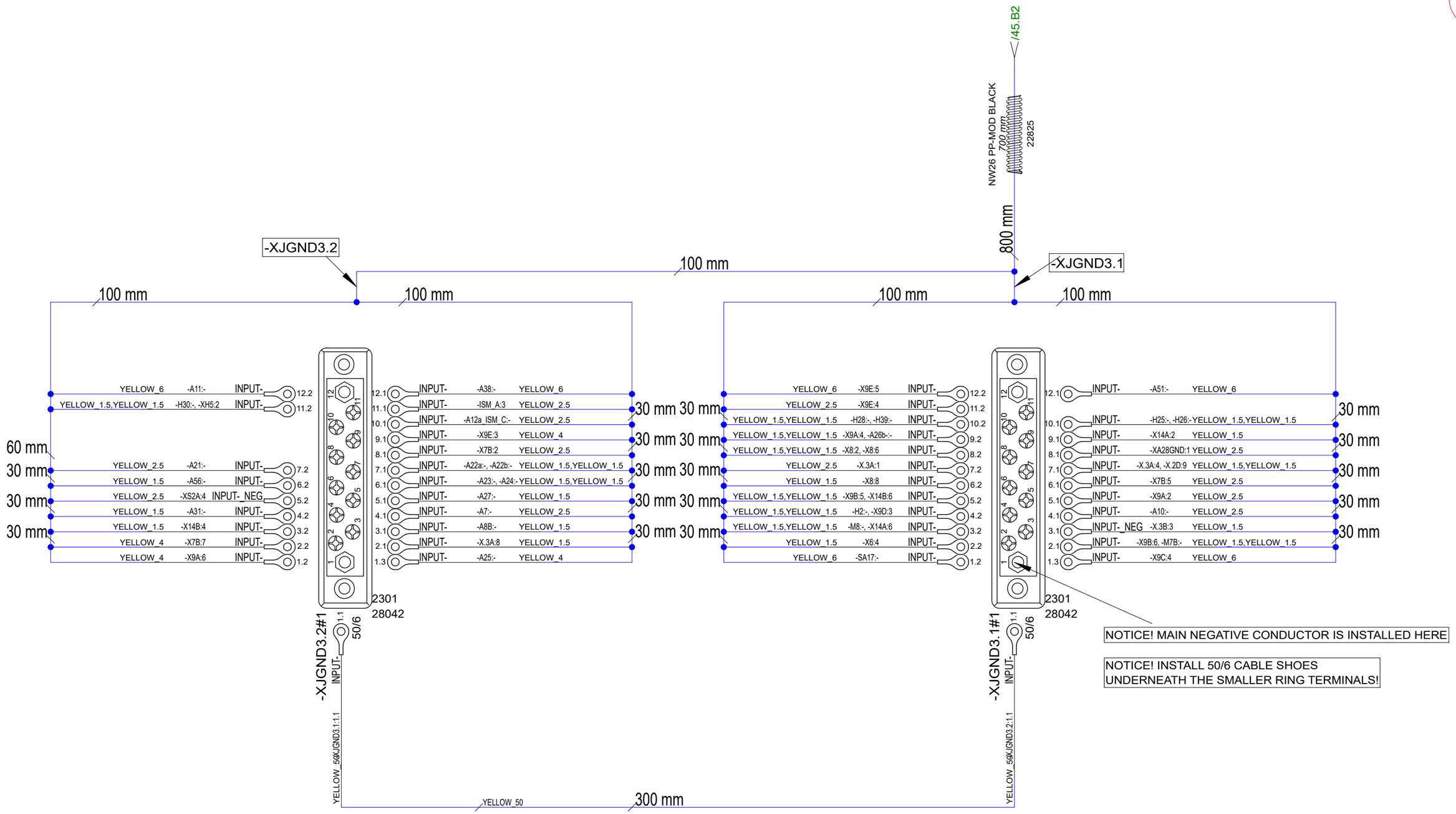

30.4.2024	PF	C4: 2005089; Light pack, branch and length changes	Date	24.4.2023	NAVIX	Axopar		39924	2004468
8.8.2024	PF	C5: 2005089; Night cam, length changes	Drawing by	PF		Boat	Sub-product code	Product code	Project ID
7.10.2024	PF	C6: 2005259; A29 Z2, WES, A29/-, C1 added, A7&A7B ->usb	Sheet rev.	6		28 MK3	DECK HARNESS	HL	46 / 106
Date of modification	Modified by	Description	Project rev.	C	Copyright by	Boat model	Title	Loc	Sheet

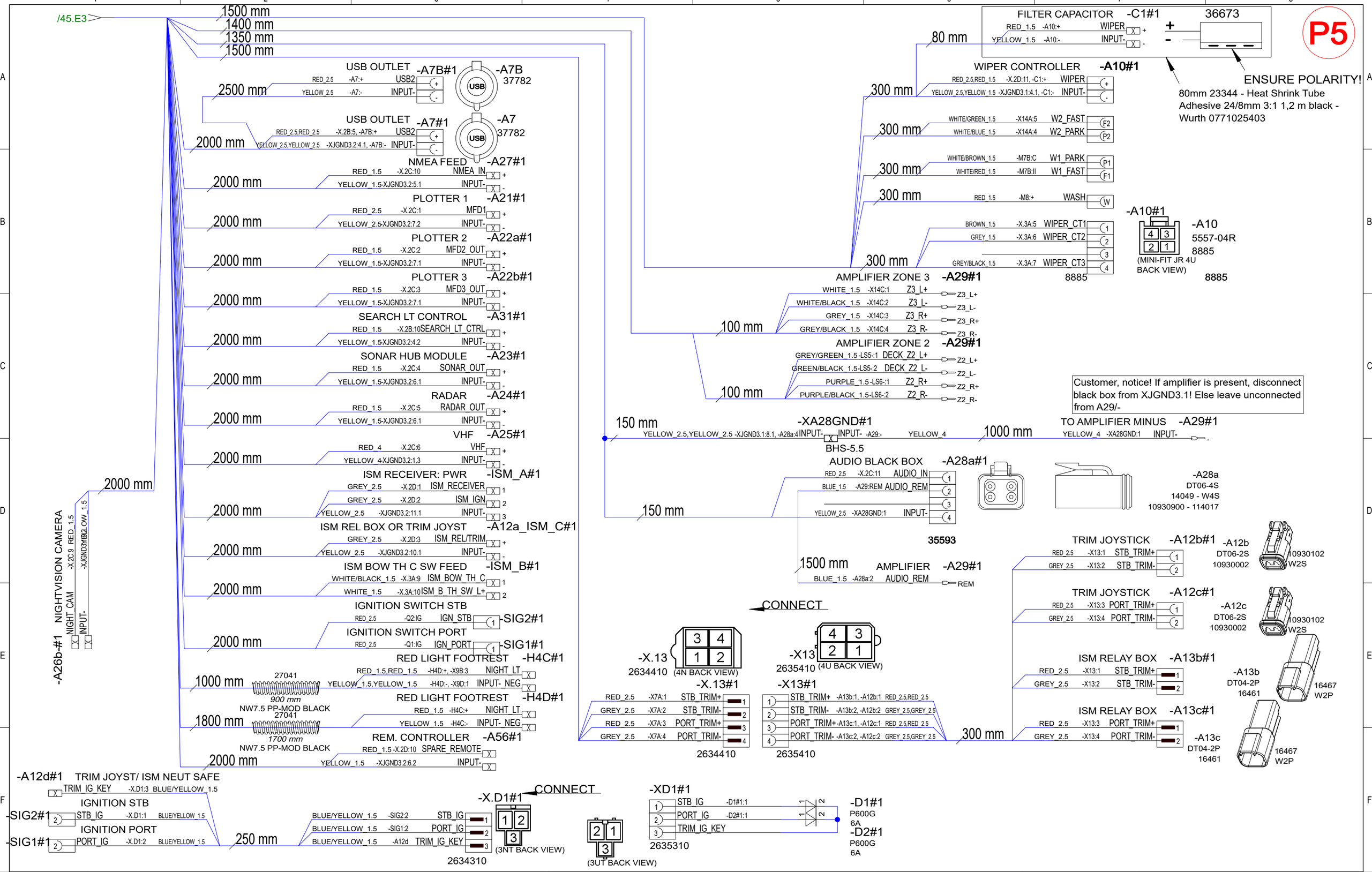

30.4.2024	PF	C4: 2005089; Light pack, branch and length changes	Date 24.5.2024	NAVIX	Axopar	39924	2004468
8.8.2024	PF	C5: 2005089; Night cam, length changes	Drawing by PF		Boat	Sub-product code / Product code	Project ID
7.10.2024	PF	C6: 2005259; A29 Z2, WES, A29/-, C1 added, A7&A7B ->usb	Sheet rev. 6		28 MK3	DECK HARNESS	HL
Date of modification	Modified by	Description	Project rev. C	Copyright by	Boat model	Title	Loc / 47 / 106 Sheet

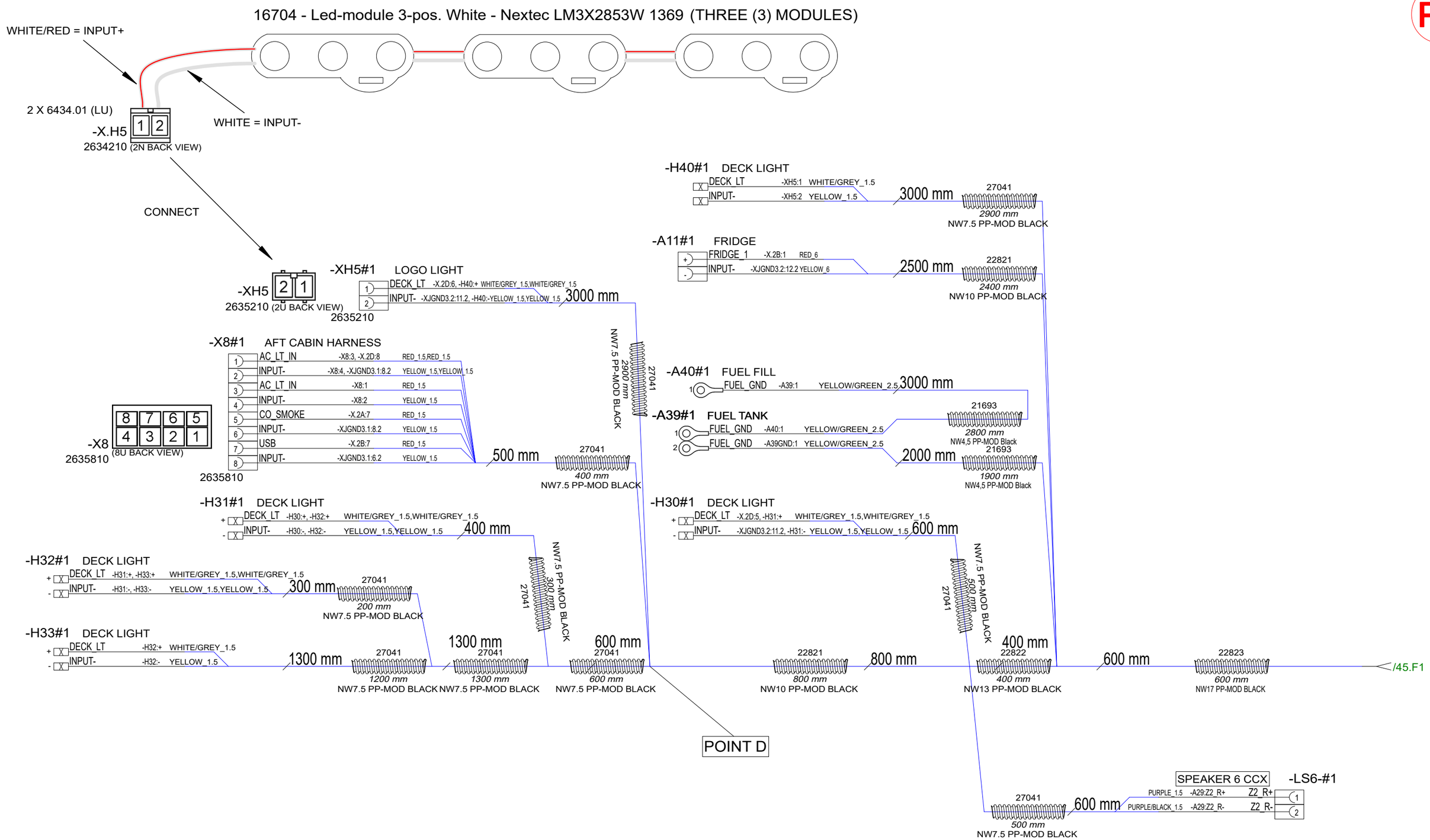

30.4.2024	PF	C4: 2005089; Light pack, branch and length changes	Date	24.4.2023	NAVIX	Axopar		39924	2004468
8.8.2024	PF	C5: 2005089; Night cam, length changes	Drawing by	PF		Boat	Sub-product code	Product code	Project ID
7.10.2024	PF	C6: 2005259; A29 Z2, WES, A29/-, C1 added, A7&A7B ->usb	Sheet rev.	6		28 MK3	DECK HARNESS	HL	48 / 106
Date of modification	Modified by	Description	Project rev.	C	Copyright by	Boat model	Title	Loc	Sheet

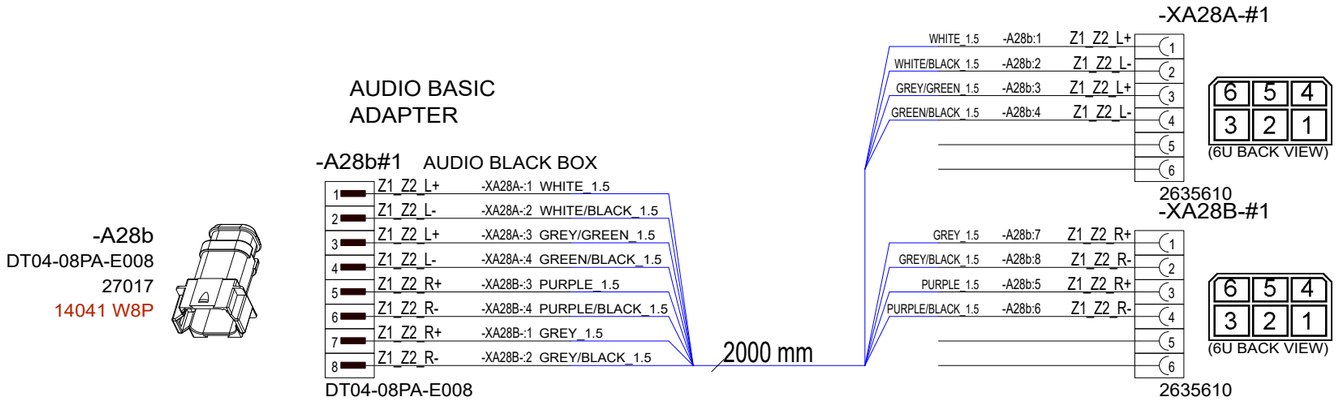

29.5.2024	PF	C1: 2005089; New product	Date	29.5.2024	NAVIX	Axopar		41638	2004468
			Drawing by	PF		Boat	Sub-product code	Product code	Project ID
			Sheet rev.	1		28 MK3	AUDIO BASIC ADAPTER	HL	49 / 106
Date of modification	Modified by	Description	Project rev.	C	Copyright by	Boat model	Title	Loc	Sheet

Customer note: This harness is only installed when 42474 IS installed AND 41387 IS NOT

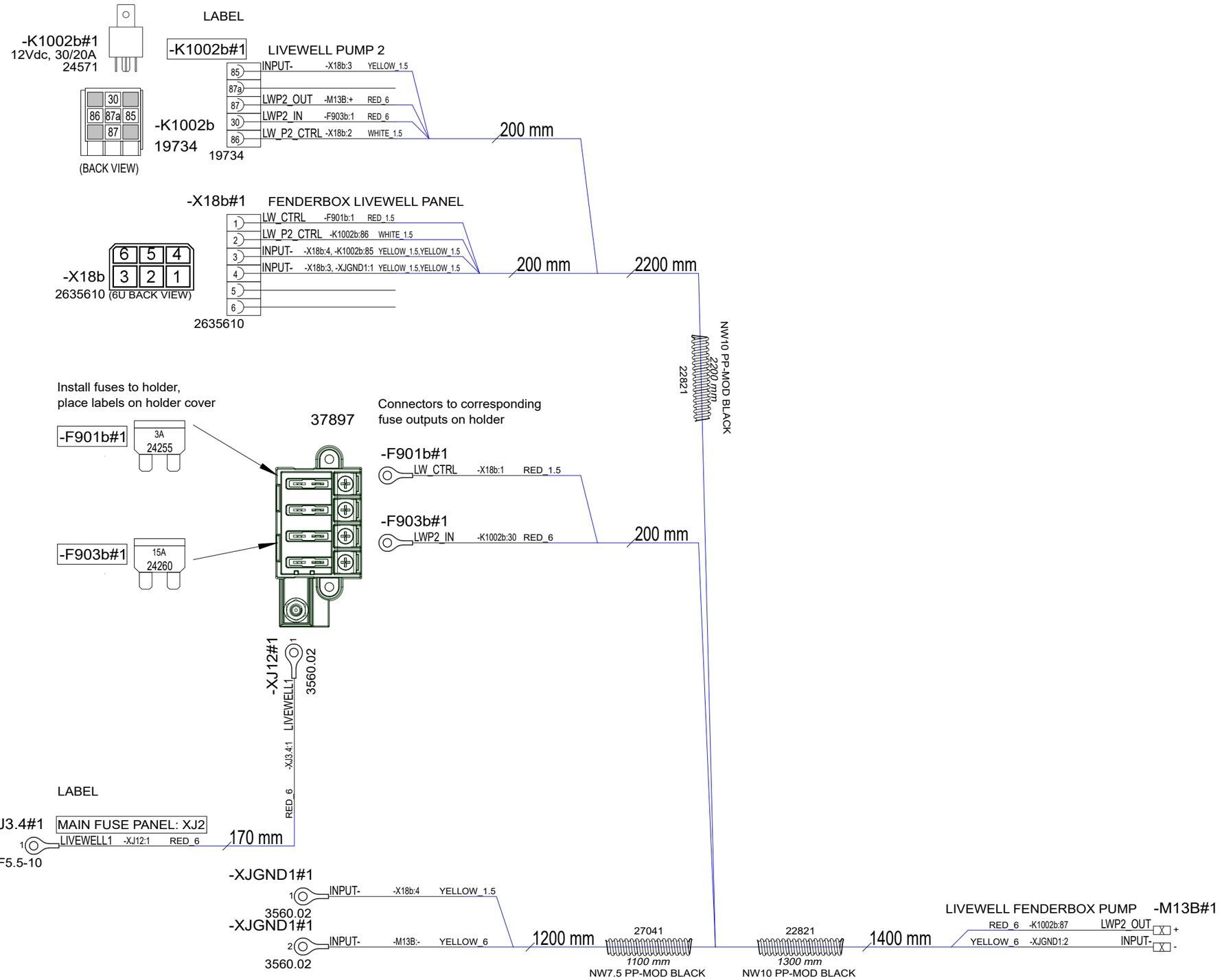

14.10.2024	PF	C1: 2005259; New drawing	Date	14.10.2024	NAVIX	Axopar		42475	2004468
			Drawing by	PF		Boat	Sub-product code	Product code	Project ID
			Sheet rev.	1		28 MK3	CCX LIVEWELL HARNESS FENDERBOX	HL	50 / 106
Date of modification	Modified by	Description	Project rev.	C	Copyright by	Boat model	Title	Loc	Sheet

NOTICE! CABLES WITH STICKER

FOR EXAMPLE

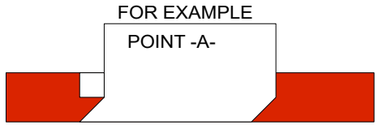

NOTICE!
BATTERY CABLES NEED MARKINGS
SHOWN IN EXAMPLE BELOW. PRINTED EVERY 120mm.

EXEMPTION:
ALL BLACK WIRES
THIS MARKING IS NOT NEEDED.

EXAMPLE: RED 50mm2 WIRE MARKINGS.
MARKING SHOWN ABOVE ONLY TO CABLES LISTED BELOW.

LOOK FOR EQUIVALENT AWG SIZE FOR mm2
AND ADD THIS TO CABLE MARKINGS.
FOR EXAMPLE:
CABLE SIZE IS 70mm2 --> MARKING AWG2/0.

EQUIVALENCY:

mm2		AWG
50 mm2	=	AWG0
70 mm2	=	AWG2/0
95 mm2	=	AWG3/0
120 mm2	=	250 kcmil

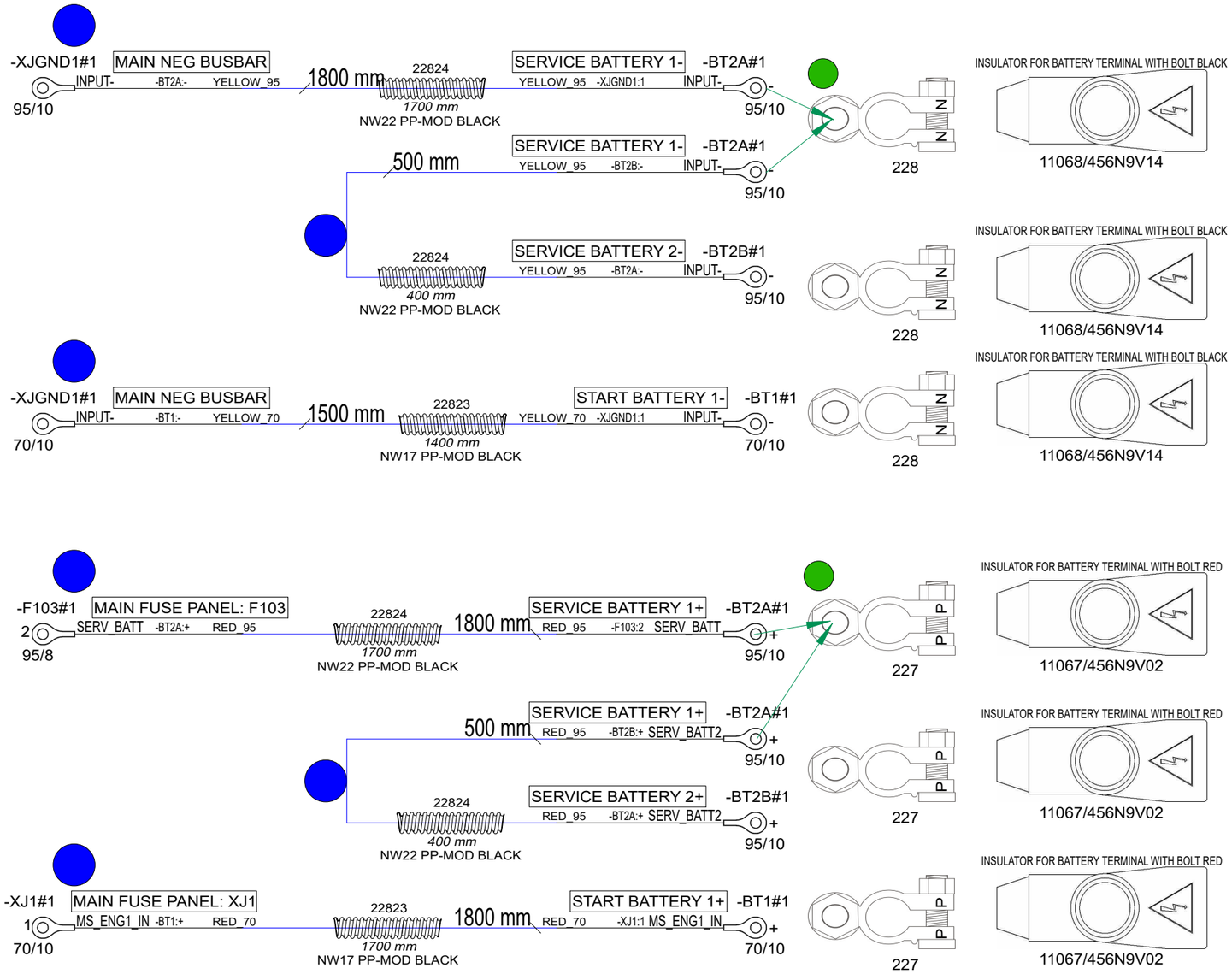

1. An opening about two centimeters wide is cut in the back wall of the insulator.
2. The insulator is installed only on the upper cable and is moved into place.
3. The position of the insulator is fixed above the beginning of the cable lugs with a cable tie around both cables.

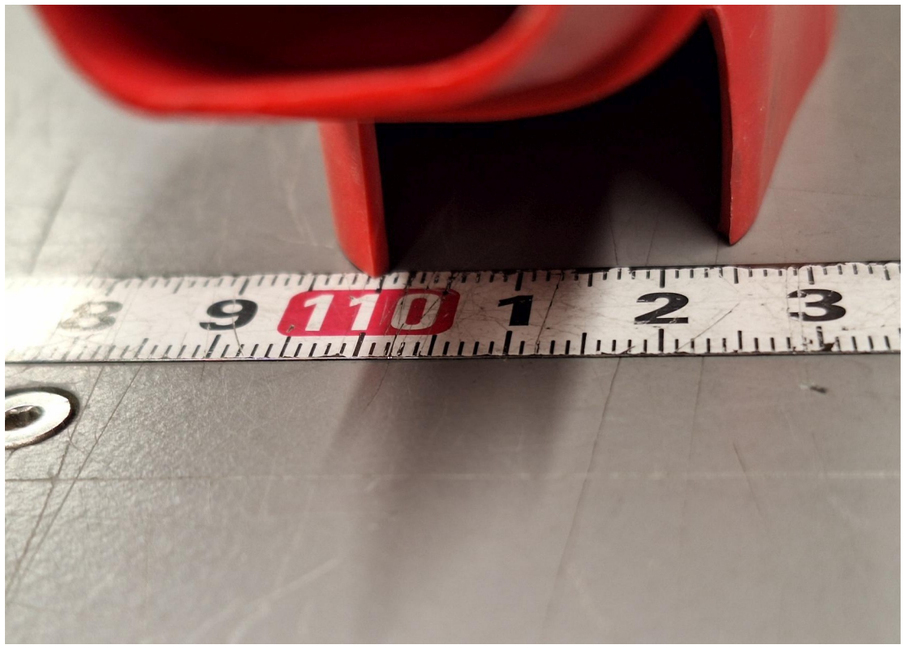

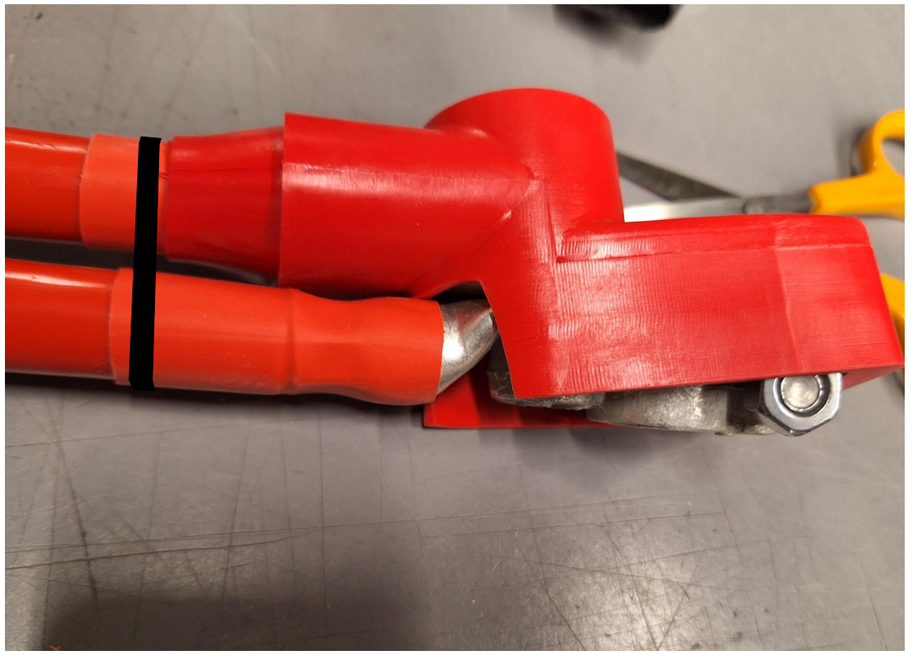

28.9.2023	PF	2004800; labels	Date 20.3.2023	NAVIX	Axopar		38677 / 2004468
26.2.2024	PF	B2: 2004979; port alt cable added, start minus +800mm	Drawing by PF		Boat	Sub-product code	Product code / Project ID
14.5.2024	PF	C3: 2005089; Added battery terminals, Fuse unit supply cable lengths	Sheet rev. 3		28 MK3	BATTERY CABLES	HL
Date of modification	Modified by	Description	Project rev. C	Copyright by	Boat model	Title	Loc / 51/ 106 Sheet

NOTICE! CABLES WITH STICKER

FOR EXAMPLE

POINT -A-

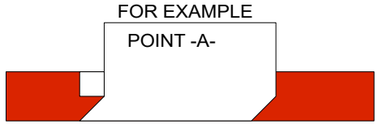

NOTICE!
BATTERY CABLES NEED MARKINGS
SHOWN IN EXAMPLE BELOW. PRINTED EVERY 120mm.

EXEMPTION:
ALL BLACK WIRES
THIS MARKING IS NOT NEEDED.

MARKING

RK90/115 750Vac/ 1000Vdc AWG0 GR90/115 C

CABLE

EXAMPLE: RED 50mm2 WIRE MARKINGS.
MARKING SHOWN ABOVE ONLY TO CABLES LISTED BELOW.

LOOK FOR EQUIVALENT AWG SIZE FOR mm2
AND ADD THIS TO CABLE MARKINGS.
FOR EXAMPLE:
CABLE SIZE IS 70mm2 --> MARKING AWG2/0.

EQUIVALENCY:

mm2		AWG
50 mm2	=	AWG0
70 mm2	=	AWG2/0
95 mm2	=	AWG3/0
120 mm2	=	250 kcmil

NOTICE!
BATTERY CABLES NEED MARKINGS
SHOWN IN EXAMPLE BELOW. PRINTED EVERY 120mm.

EXEMPTION:
ALL BLACK WIRES
THIS MARKING IS NOT NEEDED.

MARKING

R2 ISO 6722 100V AWG6 +100 C

CABLE

EXAMPLE: RED 16mm2 WIRE MARKINGS.
MARKING SHOWN ABOVE ONLY TO CABLES LISTED BELOW.

LOOK FOR EQUIVALENT AWG SIZE FOR mm2
AND ADD THIS TO CABLE MARKINGS.
FOR EXAMPLE:
CABLE SIZE IS 25mm2 --> MARKING AWG3.

EQUIVALENCY:

mm2		AWG
10 mm2	=	AWG8
16 mm2	=	AWG6
25 mm2	=	AWG3
35 mm2	=	AWG2

LABEL:
-Q1

INCLUDED:
38826

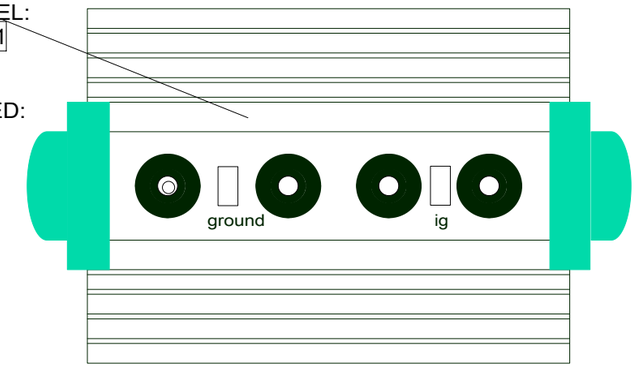

-XJGND1#1 MAIN NEG BUSBAR INPUT- -XJM1:- YELLOW_70 3000 mm ENGINE 1 JUNCT BOX XJM1 -XJM1#1 YELLOW_70 -XJGND1:1 INPUT- -
70/10 70/8

-XJM1#1 ENGINE 1 JUNCT BOX XJM1 MS_ENG1_OUT -F114:1 RED_70 2800 mm MAIN FUSE PANEL: F114 -F114#1 RED_70 -XJM1:+ MS_ENG1_OUT 1
70/8 70/10

INCLUDED: V2500

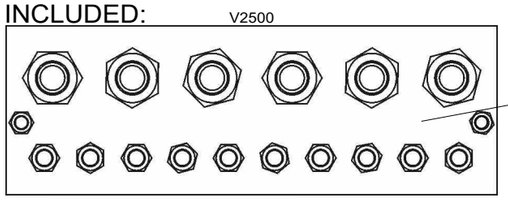

LABEL:
-XJGND1

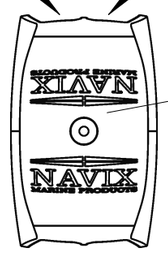

LABEL:
-XJM1#1

V4100

-G1#1 ENG 1 GENERATOR: OUT ALT_IN_PORT -Q1:IN RED_50 5000 mm PORT ISOLATOR: IN -Q1#1 RED_50 -G1:OUT ALT_IN_PORT IN
OUT 50/8 50/8

-Q1#1 PORT ISOLATOR: 2-OUT ALT1_PORT -F111:2 RED_35 1300 mm MAIN FUSE PANEL: F111 -F111#1 RED_35 -Q1:2-OUT ALT1_PORT 2
2-OUT 35/8 35/8

-Q1#1 PORT ISOLATOR: 3-OUT ALT2_PORT -F102:2 RED_35 1300 mm MAIN FUSE PANEL: F102 -F102#1 RED_35 -Q1:3-OUT ALT2_PORT 2
3-OUT 35/8 35/8

-F101#1 MAIN FUSE PANEL: F101 DIRECT+ -XJ5:1 RED_16 5000 mm FUSE UNIT: XJ5 -XJ5#1 RED_16 -F101:2 DIRECT+ 1
2 16/8 16/10

-F106#1 MAIN FUSE PANEL: F106 INPUT+ -XJ6:1 RED_50 5000 mm FUSE UNIT: XJ6 -XJ6#1 RED_50 -F106:2 INPUT+ 1
2 50/8 50/6

-XJGND1#1 MAIN NEG BUSBAR INPUT- -Q1:GND YELLOW_2.5 1000 mm PORT ISOLATOR: GND -Q1#1 YELLOW_2.5 -XJGND1:1 INPUT- GND
3560.02 RSB 7901

-XJGND1#1 MAIN NEG BUSBAR INPUT- -XJGND3.1:1 YELLOW_50 5000 mm CONSOLE NEG BUSBAR -XJGND3.1#1 YELLOW_50 -XJGND1:1 INPUT- 1
50/10 50/6

28.9.2023	PF	2004800; labels	Date	29.8.2024	NAVIX	Axopar		38677	2004468
26.2.2024	PF	B2: 2004979; port alt cable added, start minus +800mm	Drawing by	PF		Boat	Sub-product code	Product code	Project ID
14.5.2024	PF	C3: 2005089; Added battery terminals, Fuse unit supply cable lengths	Sheet rev.	3		28 MK3	BATTERY CABLES	HL	52 / 106
Date of modification	Modified by	Description	Project rev.	C	Copyright by	Boat model	Title	Loc	Sheet

NOTICE! CABLES WITH STICKER

FOR EXAMPLE

POINT -A-

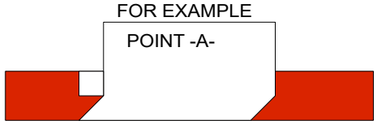

NOTICE!
BATTERY CABLES NEED MARKINGS
SHOWN IN EXAMPLE BELOW. PRINTED EVERY 120mm.

EXEMPTION:
ALL BLACK WIRES
THIS MARKING IS NOT NEEDED.

EXAMPLE: RED 50mm2 WIRE MARKINGS.
MARKING SHOWN ABOVE ONLY TO CABLES LISTED BELOW.

LOOK FOR EQUIVALENT AWG SIZE FOR mm2
AND ADD THIS TO CABLE MARKINGS.
FOR EXAMPLE:
CABLE SIZE IS 70mm2 --> MARKING AWG2/0.

EQUIVALENCY:

mm2		AWG
50 mm2	=	AWG0
70 mm2	=	AWG2/0
95 mm2	=	AWG3/0
120 mm2	=	250 kcmil

1. An opening about two centimeters wide is cut in the back wall of the insulator.
2. The insulator is installed only on the upper cable and is moved into place.
3. The position of the insulator is fixed above the beginning of the cable lugs with a cable tie around both cables.

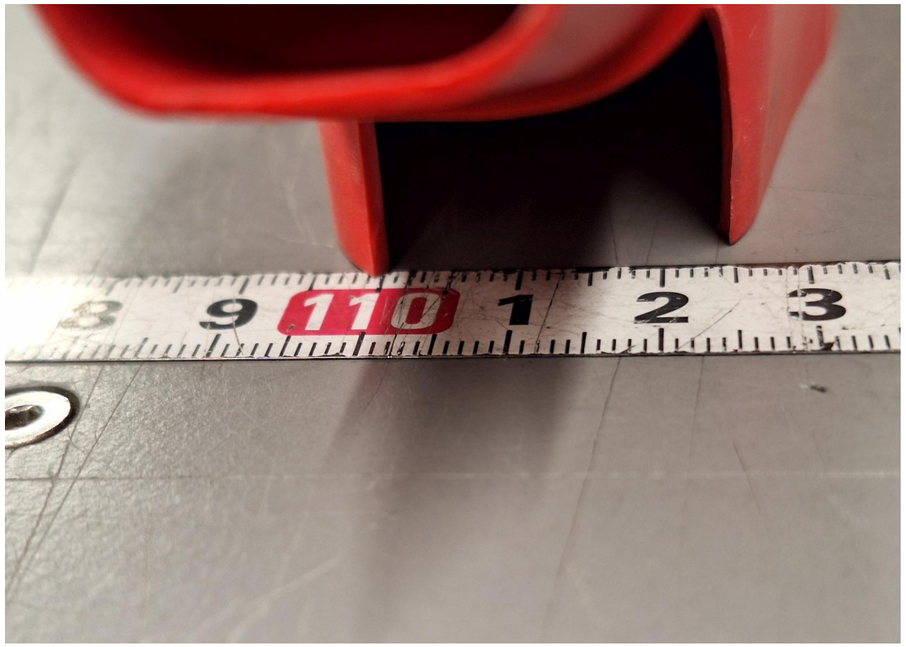

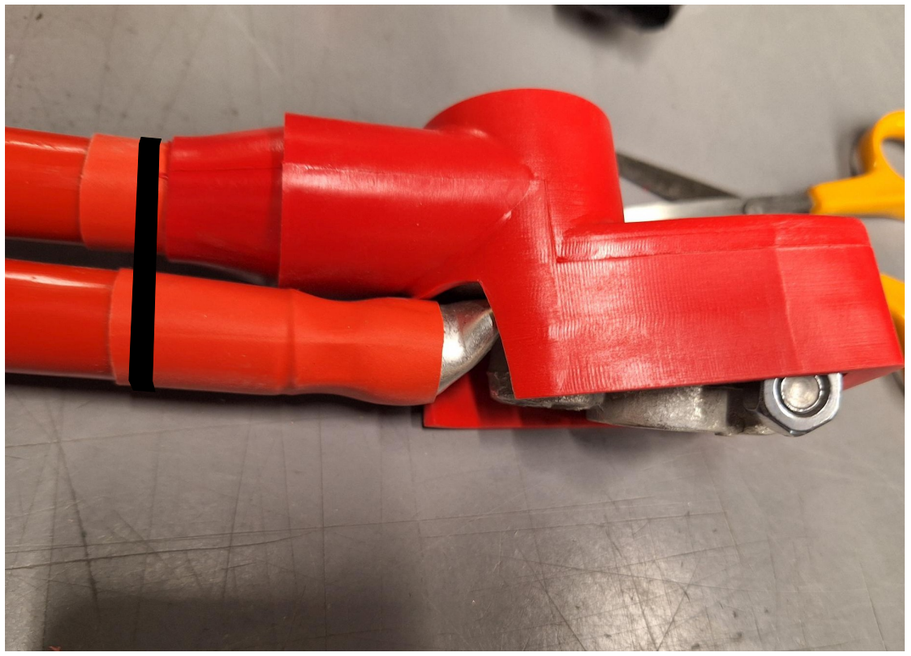

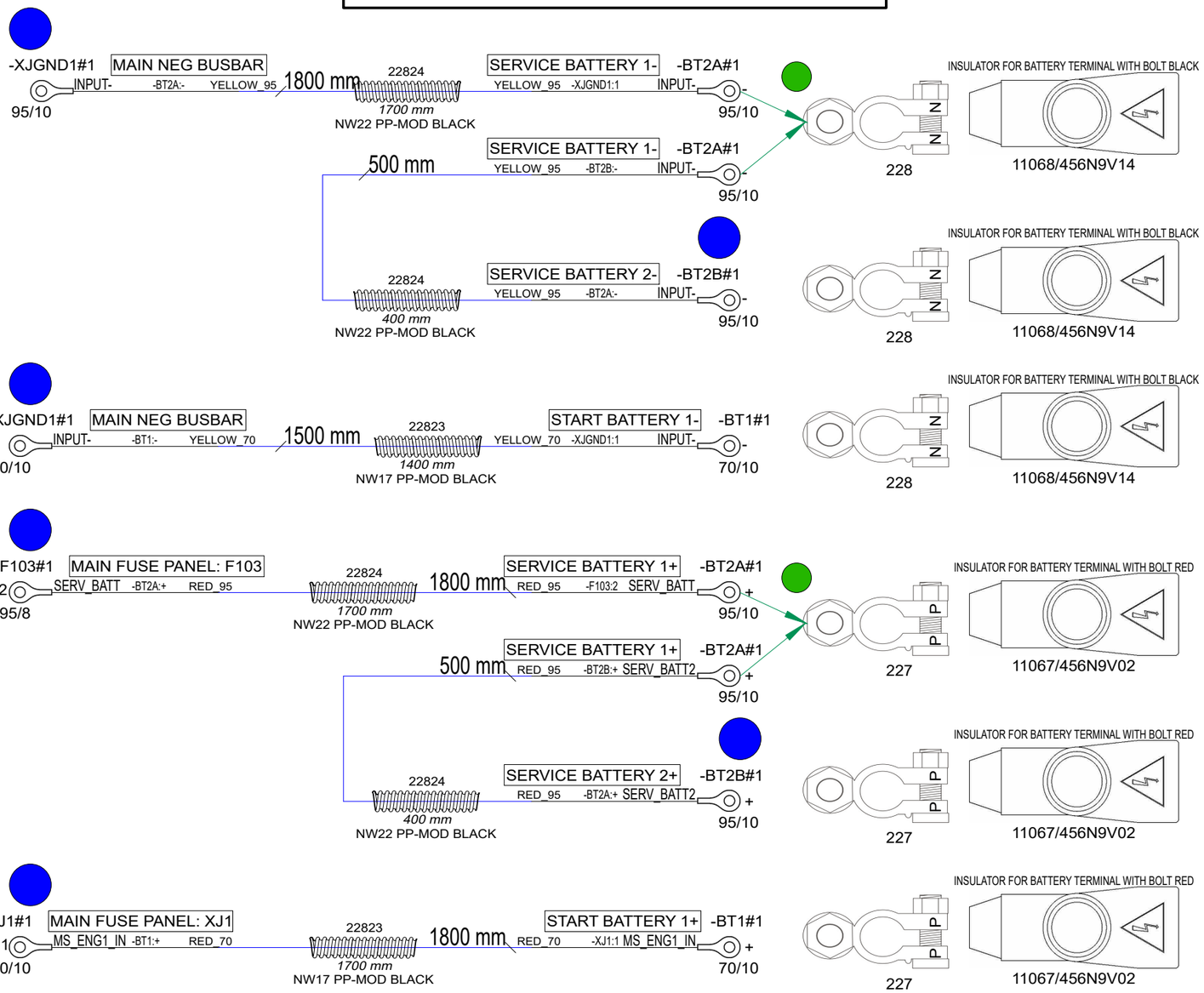

9.8.2024	PF	C4: 2005089; G1-Q1: +300mm	Date	28.9.2023	Axopar		39911 / 2004468
26.2.2024	PF	B2: 2004979; alt cable length +1m, start minus +800mm	Drawing by	PF	Boat	Sub-product code	Product code / Project ID
14.5.2024	PF	C3: 2005089; Added battery terminals, Fuse unit supply cable lengths	Sheet rev.	4	28 MK3	BATTERY CABLES V10	HL
Date of modification	Modified by	Description	Project rev.	C	Boat model	Title	Loc / 53 / 106 Sheet

NAVIX

Copyright by

NOTICE! CABLES WITH STICKER

FOR EXAMPLE

POINT -A-

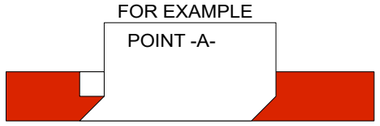

NOTICE!
BATTERY CABLES NEED MARKINGS
SHOWN IN EXAMPLE BELOW. PRINTED EVERY 120mm.

EXEMPTION:
ALL BLACK WIRES
THIS MARKING IS NOT NEEDED.

MARKING

RK90/115 750Vac/ 1000Vdc AWG0 GR90/115 C

CABLE

EXAMPLE: RED 50mm2 WIRE MARKINGS.
MARKING SHOWN ABOVE ONLY TO CABLES LISTED BELOW.

LOOK FOR EQUIVALENT AWG SIZE FOR mm2
AND ADD THIS TO CABLE MARKINGS.
FOR EXAMPLE:
CABLE SIZE IS 70mm2 --> MARKING AWG2/0.

EQUIVALENCY:

mm2		AWG
50 mm2	=	AWG0
70 mm2	=	AWG2/0
95 mm2	=	AWG3/0
120 mm2	=	250 kcmil

NOTICE!
BATTERY CABLES NEED MARKINGS
SHOWN IN EXAMPLE BELOW. PRINTED EVERY 120mm.

EXEMPTION:
ALL BLACK WIRES
THIS MARKING IS NOT NEEDED.

MARKING

R2 ISO 6722 100V AWG6 +100 C

CABLE

EXAMPLE: RED 16mm2 WIRE MARKINGS.
MARKING SHOWN ABOVE ONLY TO CABLES LISTED BELOW.

LOOK FOR EQUIVALENT AWG SIZE FOR mm2
AND ADD THIS TO CABLE MARKINGS.
FOR EXAMPLE:
CABLE SIZE IS 25mm2 --> MARKING AWG3.

EQUIVALENCY:

mm2		AWG
10 mm2	=	AWG8
16 mm2	=	AWG6
25 mm2	=	AWG3
35 mm2	=	AWG2

LABEL:
-Q1

INCLUDED:
38826

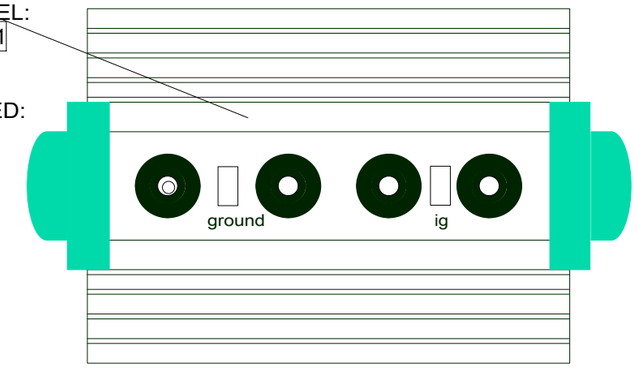

-XJGND1#1 MAIN NEG BUSBAR INPUT- -XJM1:- YELLOW_70 3000 mm ENGINE 1 JUNCT BOX XJM1 -XJM1#1 YELLOW_70 -XJGND1:1 INPUT- -
70/10 70/8

-XJM1#1 ENGINE 1 JUNCT BOX XJM1 2800 mm MAIN FUSE PANEL: F114 -F114#1
+ MS_ENG1_OUT -F114:1 RED_70 RED_70 -XJM1:MS_ENG1_OUT 1
70/8 70/10

INCLUDED: V2500

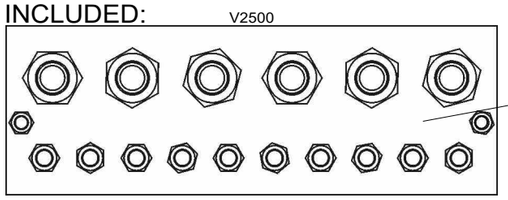

LABEL:
-XJGND1

LABEL:
-XJM1#1

V4100

Customer replaces F102 and F111 with 150A fuses in 38684 MAIN FUSE PANEL when V10 option is selected

INCLUDED

-F102#1 IGN PROT FUSE ANL 150A 150A
13633

-F111#1 IGN PROT FUSE ANL 150A 150A
13633

-G1#1 ENG 1 GENERATOR: OUT
OUT ALT_IN_PORT -Q1:IN RED_70 5300 mm RED_70 -G1:OUT ALT_IN_PORT PORTISOLATOR:IN -Q1#1 IN
70/8 70/8

-Q1#1 PORT ISOLATOR: 2-OUT
2-OUT ALT1_PORT -F111:2 RED_70 1300 mm RED_70 -Q1:2-OUT ALT1_PORT MAIN FUSE PANEL: F111 -F111#1
70/8 70/8 2

-Q1#1 PORT ISOLATOR: 3-OUT
3-OUT ALT2_PORT -F102:2 RED_70 1300 mm RED_70 -Q1:3-OUT ALT2_PORT MAIN FUSE PANEL: F102 -F102#1
70/8 70/8 2

-F101#1 MAIN FUSE PANEL: F101
2 DIRECT+ -XJ5:1 RED_16 5000 mm RED_16 -F101:2 DIRECT+ FUSE UNIT: XJ5 -XJ5#1
16/8 1 16/10

-F106#1 MAIN FUSE PANEL: F106
2 INPUT+ -XJ6:1 RED_50 5000 mm RED_50 -F106:2 INPUT+ FUSE UNIT: XJ6 -XJ6#1
50/8 1 50/6

-XJGND1#1 MAIN NEG BUSBAR
INPUT- -Q1:GND YELLOW_2.5 1000 mm YELLOW_2.5 -XJGND1:1 INPUT- PORT ISOLATOR: GND -Q1#1 GND
3560.02 RSB 7901

-XJGND1#1 MAIN NEG BUSBAR
INPUT- -XJGND3.1:1 YELLOW_50 5000 mm YELLOW_50 -XJGND1:1 INPUT- CONSOLE NEG BUSBAR -XJGND3.1#1
50/10 1 50/6

9.8.2024	PF	C4: 2005089; G1-Q1: +300mm	Date	29.8.2024	NAVIX	Axopar		39911	2004468
26.2.2024	PF	B2: 2004979; alt cable length +1m, start minus +800mm	Drawing by	PF		Boat	Sub-product code	Product code	Project ID
14.5.2024	PF	C3: 2005089; Added battery terminals, Fuse unit supply cable lengths	Sheet rev.	4		28 MK3	BATTERY CABLES V10	HL	54 / 106
Date of modification	Modified by	Description	Project rev.	C	Copyright by	Boat model	Title	Loc	Sheet

NOTICE! CABLES WITH STICKER

FOR EXAMPLE

POINT -A-

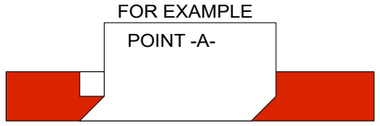

NOTICE!
BATTERY CABLES NEED MARKINGS
SHOWN IN EXAMPLE BELOW. PRINTED EVERY 120mm.

EXEMPTION:
ALL BLACK WIRES
THIS MARKING IS NOT NEEDED.

MARKING

RK90/115 750Vac/ 1000Vdc AWG0 GR90/115 C

CABLE

EXAMPLE: RED 50mm2 WIRE MARKINGS.
MARKING SHOWN ABOVE ONLY TO CABLES LISTED BELOW.

LOOK FOR EQUIVALENT AWG SIZE FOR mm2
AND ADD THIS TO CABLE MARKINGS.
FOR EXAMPLE:
CABLE SIZE IS 70mm2 --> MARKING AWG2/0.

EQUIVALENCY:

mm2		AWG
50 mm2	=	AWG0
70 mm2	=	AWG2/0
95 mm2	=	AWG3/0
120 mm2	=	250 kcmil

NOTICE!
BATTERY CABLES NEED MARKINGS
SHOWN IN EXAMPLE BELOW. PRINTED EVERY 120mm.

EXEMPTION:
ALL BLACK WIRES
THIS MARKING IS NOT NEEDED.

MARKING

R2 ISO 6722 100V AWG6 +100 C

CABLE

EXAMPLE: RED 16mm2 WIRE MARKINGS.
MARKING SHOWN ABOVE ONLY TO CABLES LISTED BELOW.

LOOK FOR EQUIVALENT AWG SIZE FOR mm2
AND ADD THIS TO CABLE MARKINGS.
FOR EXAMPLE:
CABLE SIZE IS 25mm2 --> MARKING AWG3.

EQUIVALENCY:

mm2		AWG
10 mm2	=	AWG8
16 mm2	=	AWG6
25 mm2	=	AWG3
35 mm2	=	AWG2

LABEL:
-Q2

INCLUDED:
38826

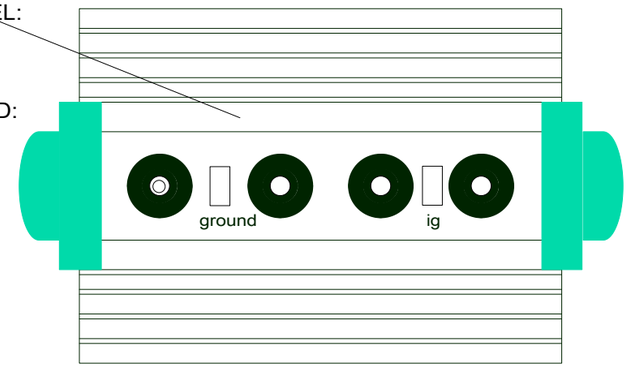

Install in indicated locations. Altogether 1 pcs each.

INSULATOR FOR BATTERY TERMINAL WITH BOLT RED

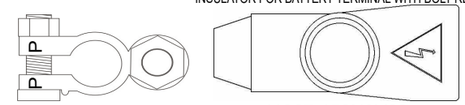

227 11067/456N9V02

INSULATOR FOR BATTERY TERMINAL WITH BOLT BLACK

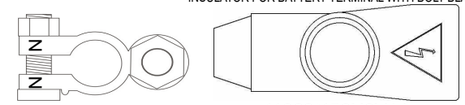

228 11068/456N9V14

-XJGND1#1 (70/10) — INPUT- — MAIN NEG BUSBAR — -BT3:- YELLOW_70 — 1800 mm — 22823 1700 mm NW17 PP-MOD BLACK — YELLOW_70 -XJGND1:1 — START BATTERY 2- INPUT- — -BT3#1 (70/10)

-BT3#1 (70/10) — MS_ENG2_IN -XJ4:1 RED_70 — START BATTERY 2+ — 1800 mm — 22823 1700 mm NW17 PP-MOD BLACK — RED_70 -BT3:+ MS_ENG2_IN — MAIN FUSE PANEL: XJ4 — -XJ4#1 1 (70/10)

-XJGND1#1 (70/10) — INPUT- — MAIN NEG BUSBAR — -XJM2:- YELLOW_70 — 3400 mm — YELLOW_70 -XJGND1:1 — ENGINE 1 JUNCT BOX XJM2 INPUT- — -XJM2#1 (70/8)

-XJM2#1 (70/8) — MS_ENG2_OUT -F115:1 RED_70 — ENGINE 1 JUNCT BOX XJM2 — 2800 mm — RED_70 -XJM2:MS_ENG2_OUT — MAIN FUSE PANEL: F115 — -F115#1 1 (70/10)

LABEL:
-XJM2#1

V4100

-G2#1 OUT (50/8) — ALT_IN_STB -Q2:IN RED_50 — 5000 mm — RED_50 -G2:OUT ALT_IN_STB — STB ISOLATOR: IN — -Q2#1 IN (50/8)

-Q2#1 2-OUT (35/8) — ALT1_STB -F112:2 RED_35 — 1300 mm — RED_35 -Q2:2-OUT ALT1_STB — MAIN FUSE PANEL: F112 — -F112#1 2 (35/8)

-Q2#1 3-OUT (35/8) — ALT2_STB -F104:2 RED_35 — 1300 mm — RED_35 -Q2:3-OUT ALT2_STB — MAIN FUSE PANEL: F104 — -F104#1 2 (35/8)

-XJGND1#1 (3560.02) — INPUT- — MAIN NEG BUSBAR — -Q2:GND YELLOW_2.5 — 2000 mm — YELLOW_2.5 -XJGND1:1 INPUT- — STB ISOLATOR: GND — -Q2#1 GND RSB 7901

CUSTOMER INSTALLS TO
38687 MAIN SWITCH CONTROL PANEL

-S503
35858 -S503#1 STB ENGINE MAIN SWITCH

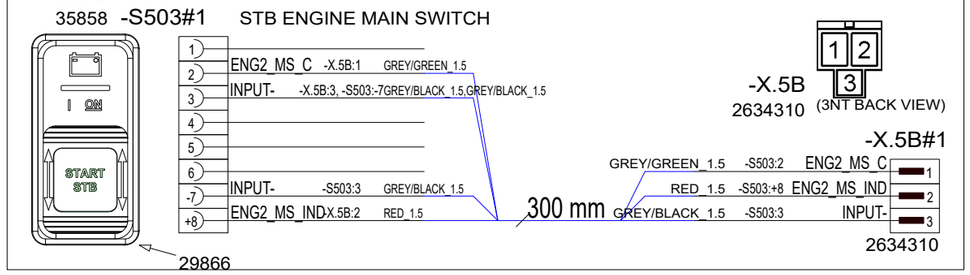

Date of modification	Modified by	Description
28.9.2023	PF	A2: 2004800;Added XJ4 busbar+screws, 90000->90001, labels., lengths
12.2.2024	PF	B3: 2004979; start cable lengths, port alt cable removed
14.5.2024	PF	C4: 2005089; Added battery terminals

Date	20.3.2023
Drawing by	PF
Sheet rev.	4
Project rev.	C

NAVIX
Copyright by

Axopar Boat		38678 Product code	2004468 Project ID
28 MK3 Boat model	DUAL ENGINE BATTERY CABLES Title	HL Loc	55 / 106 Sheet

(DRAWING FOR CUSTOMER REFERENCE)

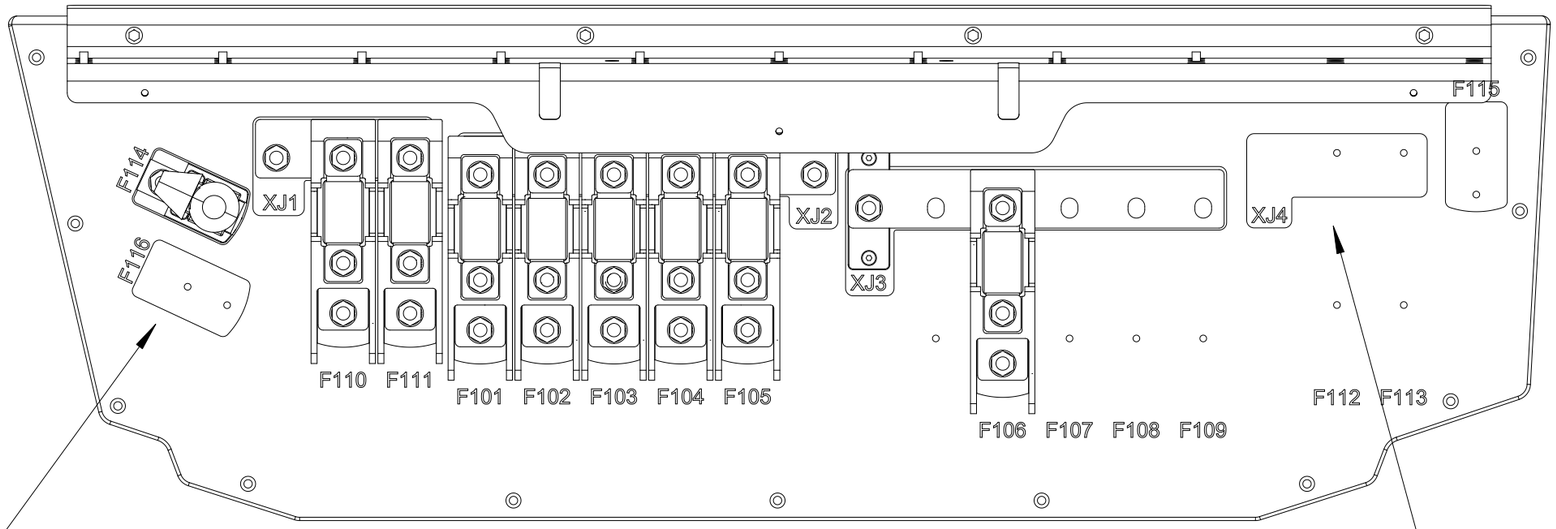

INCLUDED, PACK SEPARATELY
CUSTOMER INSTALLS TO MAIN FUSE UNIT (F115 AND F116)

1. 2pc 34642 CFBAR1-250SP SINGLE STUD

2pc VMI32012 HEX NUT M8 DIN934
2pc VMI32013 FLAT WASHER FOR HEX BOLT
2pc VMI32011 SPRING LOCK WASHER M8 DIN127
2pc 34641 -B.6 CFCOVER-1R SINGLE STUD/RED
2pc 34640 -PS_F.6 CUBE FUSE MRFB-080 80A

-F115#1
34640

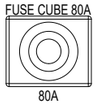

2. 2pc VMI32012 HEX NUT M8 DIN934
2pc VMI32013 FLAT WASHER FOR HEX BOLT
2pc VMI32011 SPRING LOCK WASHER M8 DIN127

-F116#1
34640

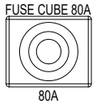

3. 6pcs VMI30917 COUNTERSUNK HEAD SCREW HEX SOCKET M4X16 DIN7991

4. 2pc VMI32019 - HEX Bolt Full thread M8X30 DIN933

5. 2pc 39047_NAVIX_LINE_CUBE_FUSE_HOLDER_SINGLE

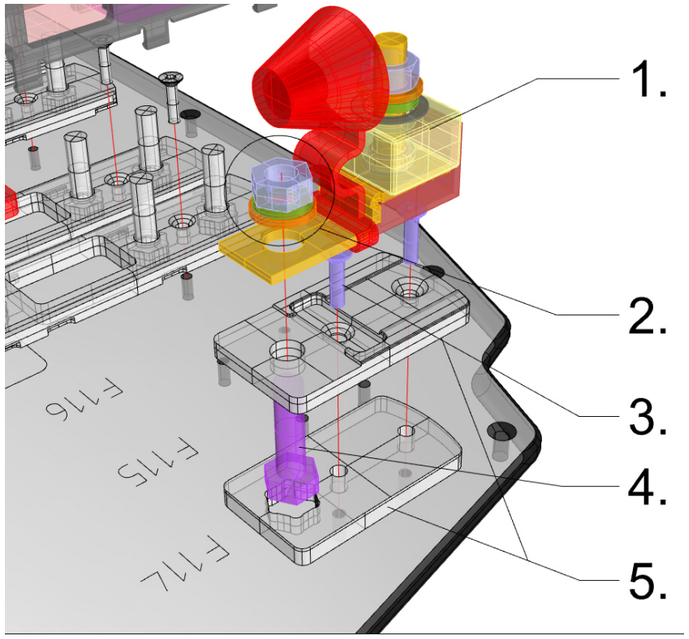

INCLUDED, PACK SEPARATELY
CUSTOMER INSTALLS TO MAIN FUSE UNIT (XJ4, F112 AND F113)

1pc 39057_NAVIX_LINE_BUS_BAR_TYPE5C_3X
1pc VMI32012 HEX NUT M8 DIN934
1pc VMI32013 FLAT WASHER FOR HEX BOLT
1pc VMI32011 SPRING LOCK WASHER M8 DIN127
1pc VMI32018 HEX BOLT FULL THREAD M8X25 DIN933

(for attaching holders to panel):
4 pcs VMI30917 COUNTERSUNK HEAD SCREW
HEX SOCKET M4X16 DIN7991

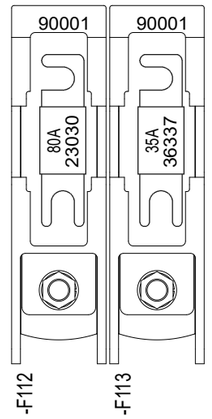

Date of modification	Modified by	Description
28.9.2023	PF	A2: 2004800;Added XJ4 busbar+screws, 90000->90001, labels., lengths
12.2.2024	PF	B3: 2004979; start cable lengths, port alt cable removed
14.5.2024	PF	C4: 2005089; Added battery terminals

Date	19.10.2023
Drawing by	PF
Sheet rev.	4
Project rev.	C

NAVIX
Copyright by

Axopar Boat		38678 Product code	2004468 Project ID
28 MK3 Boat model	DUAL ENGINE BATTERY CABLES Title	HL Loc	56 / 106 Sheet

NOTICE! CABLES WITH STICKER

FOR EXAMPLE

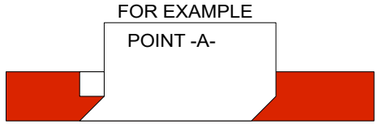

-A32#1	BATTERY CHARGER: 1	CH1	-F110:2	RED_16	1000 mm	RED_16	-A32:1	CH1	MAIN FUSE PANEL: F110	-F110#1
1 / 16/6									2 / 16/8	
-A32#1	BATTERY CHARGER: 2	CH2	-F105:2	RED_16	1000 mm	RED_16	-A32:2	CH2	MAIN FUSE PANEL: F105	-F105#1
2 / 16/6									2 / 16/8	
-A32#1	BATTERY CHARGER: 3	CH3	-F113:2	RED_16	1300 mm	RED_16	-A32:3	CH3	MAIN FUSE PANEL: F113	-F113#1
3 / 16/6									2 / 16/8	
-A32#1	BATTERY CHARGER: GND	INPUT-	-XJGND1:1	YELLOW_16	800 mm	YELLOW_16	-A32:GND	INPUT-	MAIN NEG BUSBAR	-XJGND1#1
GND / 16/6									16/10	
-A32#1	BATTERY CHARGER: PE	CH1_PE	-XJGND1:1	AWG_12_Green	800 mm	AWG_12_Green	-A32:PE	CH1_PE	MAIN NEG BUSBAR	-XJGND1#1
PE / 3560.02									3314.02	

NOTICE!
BATTERY CABLES NEED MARKINGS
SHOWN IN EXAMPLE BELOW. PRINTED EVERY 120mm.

EXEMPTION:
ALL BLACK WIRES
THIS MARKING IS NOT NEEDED.

MARKING

R2 ISO 6722 100V AWG6 +100 C

EXAMPLE: RED 16mm2 WIRE MARKINGS.

CABLE

MARKING SHOWN ABOVE ONLY TO CABLES LISTED BELOW.

LOOK FOR EQUIVALENT AWG SIZE FOR mm2
AND ADD THIS TO CABLE MARKINGS.

FOR EXAMPLE:
CABLE SIZE IS 25mm2 --> MARKING AWG3.

EQUIVALENCY:

mm2		AWG
10 mm2	=	AWG8
16 mm2	=	AWG6
25 mm2	=	AWG3
35 mm2	=	AWG2

Date of modification	Modified by	Description
6.10.2023	PF	2004800; labels
28.5.2024	PF	C1: 2005089; Not modified
17.10.2024	PF	C2: 2005259; Added PE wire

Date	20.3.2023
Drawing by	PF
Sheet rev.	2
Project rev.	C

NAVIX

Copyright by

Axopar			
Boat	Sub-product code	38679 Product code	2004468 Project ID
28 MK3	CHARGER CABLES	HL	57 / 106
Boat model	Title	Loc	Sheet

NOTICE! CABLES WITH STICKER

FOR EXAMPLE

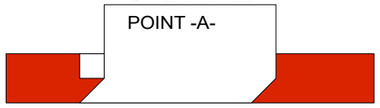

-A32#1 BATTERY CHARGER: 1
1 CH1 -F110:2 RED_16
16/6
1000 mm
MAIN FUSE PANEL: F110 -F110#1
RED_16 -A32:1 CH1 2
16/8

-A32#1 BATTERY CHARGER: 2
2 CH2 -F105:2 RED_16
16/6
1000 mm
MAIN FUSE PANEL: F105 -F105#1
RED_16 -A32:2 CH2 2
16/8

-A32#1 BATTERY CHARGER: GND
GND INPUT- -XJGND1:1 YELLOW_16
16/6
800 mm
MAIN NEG BUSBAR -XJGND1#1
YELLOW_16 -A32:GND INPUT-
16/10

-A32#1 BATTERY CHARGER: PE
PE CH1_PE -XJGND1:1 AWG_12_Green
3560.02
800 mm
MAIN NEG BUSBAR -XJGND1#1
AWG_12_Green -A32:PE CH1_PE
3314.02

NOTICE!
BATTERY CABLES NEED MARKINGS
SHOWN IN EXAMPLE BELOW. PRINTED EVERY 120mm.

EXEMPTION:
ALL BLACK WIRES
THIS MARKING IS NOT NEEDED.

MARKING

R2 ISO 6722 100V AWG6 +100 C

CABLE

EXAMPLE: RED 16mm2 WIRE MARKINGS.

MARKING SHOWN ABOVE ONLY TO CABLES LISTED BELOW.

LOOK FOR EQUIVALENT AWG SIZE FOR mm2
AND ADD THIS TO CABLE MARKINGS.

FOR EXAMPLE:
CABLE SIZE IS 25mm2 --> MARKING AWG3.

EQUIVALENCY:

mm2		AWG
10 mm2	=	AWG8
16 mm2	=	AWG6
25 mm2	=	AWG3
35 mm2	=	AWG2

Date of modification	Modified by	Description
17.10.2024	PF	C2: 2005259; Added PE wire
--	PF	B1: Not modified
28.5.2024	PF	C1: 2005089; Not modified

Date	28.9.2023
Drawing by	PF
Sheet rev.	2
Project rev.	C

NAVIX
Copyright by

Axopar Boat	Sub-product code	39779 Product code	2004468 Project ID
28 MK3 Boat model	CHARGER CABLES 1 ENGINE Title	HL Loc	58 / 106 Sheet

NOTICE! CABLES WITH STICKER

FOR EXAMPLE

POINT -A-

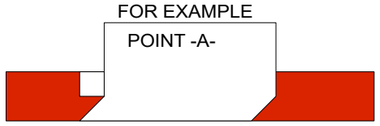

Install in indicated locations. Altogether 1 pcs each.

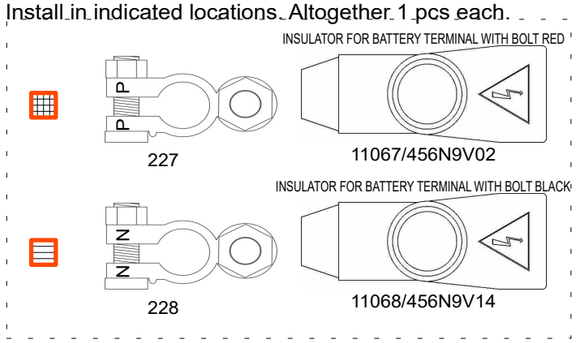

NOTICE!
BATTERY CABLES NEED MARKINGS
SHOWN IN EXAMPLE BELOW. PRINTED EVERY 120mm.

EXEMPTION:
ALL BLACK WIRES
THIS MARKING IS NOT NEEDED.

EXAMPLE: RED 50mm2 WIRE MARKINGS.

MARKING SHOWN ABOVE ONLY TO CABLES LISTED BELOW.

LOOK FOR EQUIVALENT AWG SIZE FOR mm2
AND ADD THIS TO CABLE MARKINGS.

FOR EXAMPLE:
CABLE SIZE IS 70mm2 --> MARKING AWG2/0.

EQUIVALENCY:

mm2		AWG
50 mm2	=	AWG0
70 mm2	=	AWG2/0
95 mm2	=	AWG3/0
120 mm2	=	250 kcmil

Customer:
Q2:OUT-1 and Q1:OUT-1 are combined to the same isolator output pin when using V10 engine

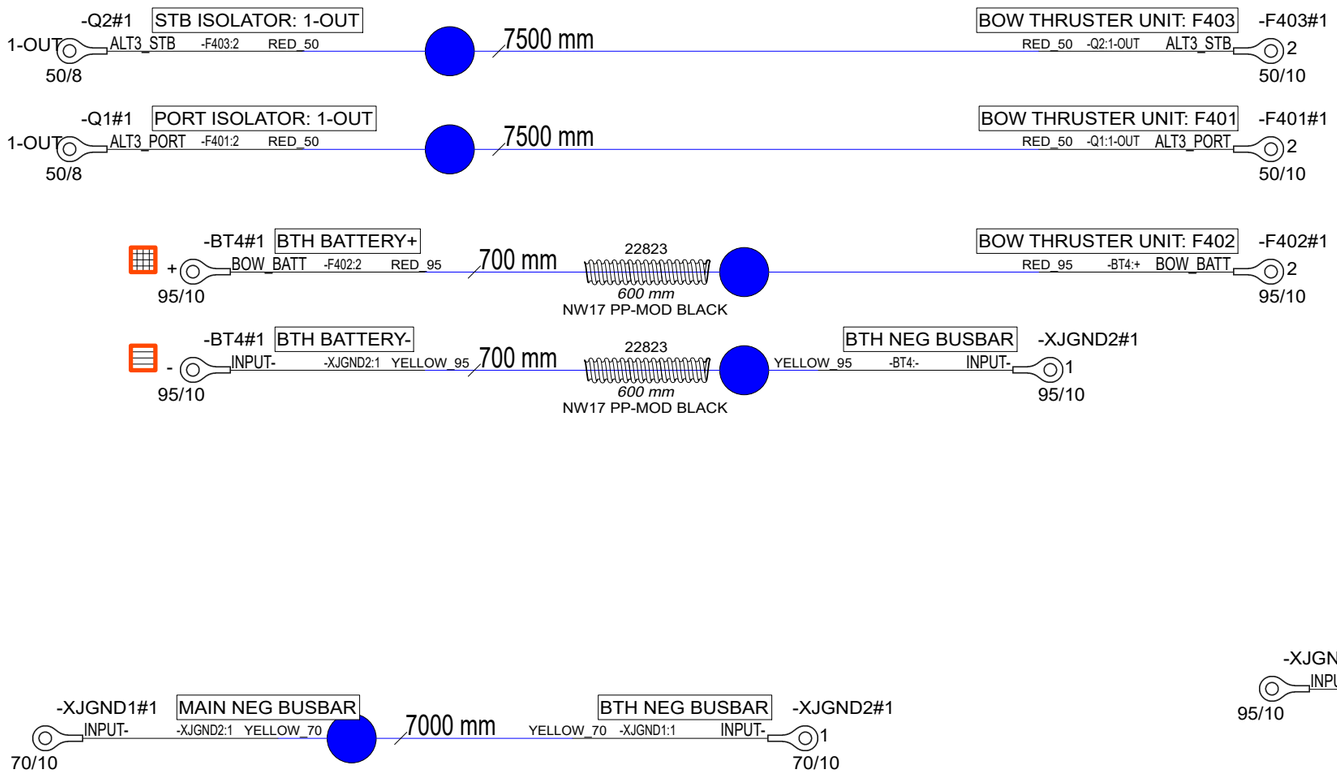

Date of modification	Modified by	Description
28.9.2023	PF	A2: 2004897; V10 update: Cable Q2-F403 +500mm, labels
1.12.2023	PF	A3: 2004800; Length changes
14.5.2024	PF	C4: 2005089; Added battery terminals, cable lug changes

Date	22.3.2023
Drawing by	PF
Sheet rev.	4
Project rev.	C

NAVIX

Copyright by

Axopar Boat	Sub-product code	38680 Product code	2004468 Project ID
28 MK3 Boat model	BOW THRUSTER CABLES Title	HL Loc	59 / 106 Sheet

NOTICE! CABLES WITH STICKER

FOR EXAMPLE

POINT -A-

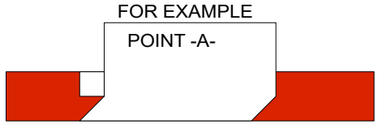

NOTICE!
BATTERY CABLES NEED MARKINGS
SHOWN IN EXAMPLE BELOW. PRINTED EVERY 120mm.

EXEMPTION:
ALL BLACK WIRES
THIS MARKING IS NOT NEEDED.

MARKING

R2 ISO 6722 100V AWG6 +100 C

CABLE

EXAMPLE: RED 16mm2 WIRE MARKINGS.

MARKING SHOWN ABOVE ONLY TO CABLES LISTED BELOW.

LOOK FOR EQUIVALENT AWG SIZE FOR mm2
AND ADD THIS TO CABLE MARKINGS.

FOR EXAMPLE:
CABLE SIZE IS 25mm2 --> MARKING AWG3.

EQUIVALENCY:

mm2		AWG
10 mm2	=	AWG8
16 mm2	=	AWG6
25 mm2	=	AWG3
35 mm2	=	AWG2

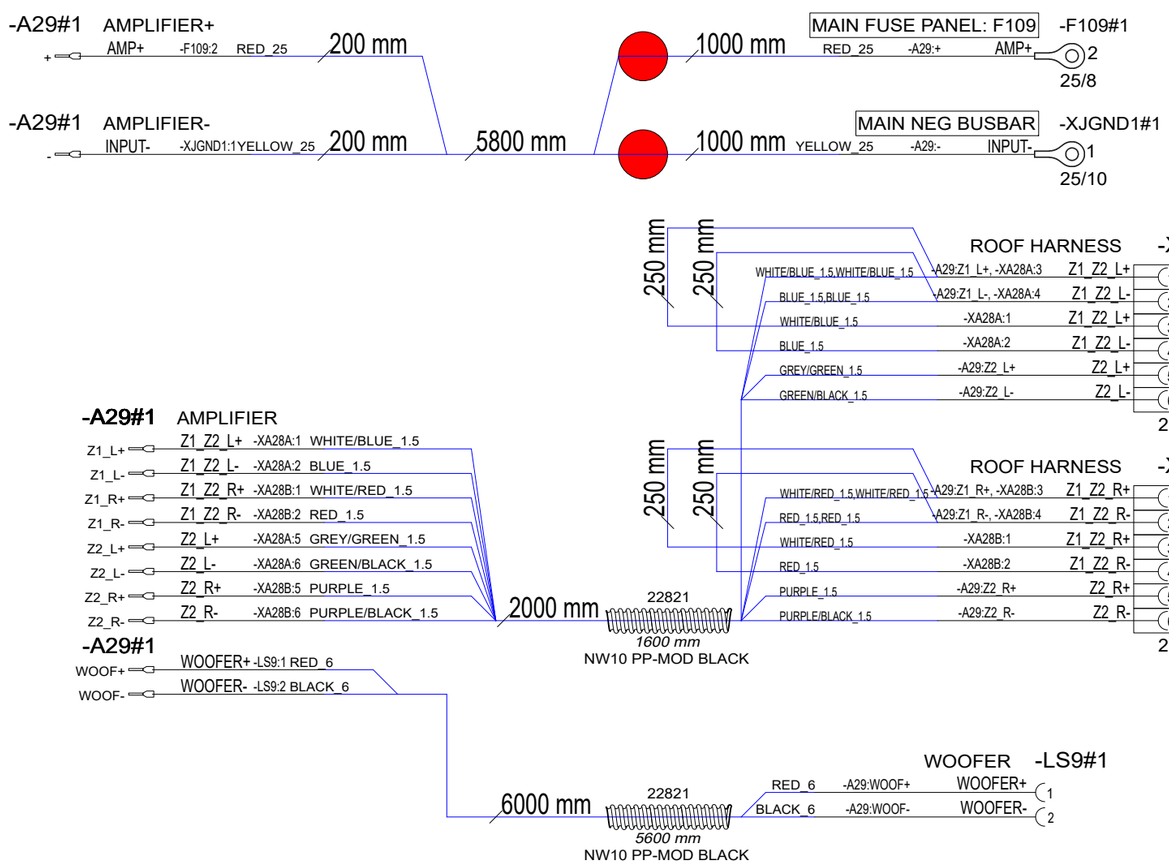

INCLUDED, CUSTOMER
INSTALLS TO MAIN FUSE UNIT

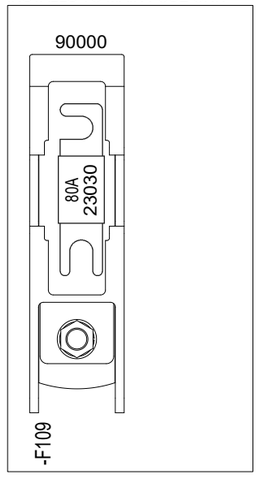

6.10.2023	PF	2004800; labels	Date	23.3.2023	NAVIX	Axopar		38681	2004468
13.5.2024	PF	C2: 2005089; Woofer wire length change	Drawing by	PF		Boat	Sub-product code	Product code	Project ID
7.10.2024	PF	C3: 2005259; Wire end sleeves and conduits added	Sheet rev.	3		28 MK3	AUDIO UPGRADE CABLES	HL	60 / 106
Date of modification	Modified by	Description	Project rev.	C	Copyright by	Boat model	Title	Loc	Sheet

NOTICE! CABLES WITH STICKER

FOR EXAMPLE

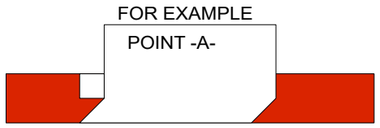

Cable ends with Reference designator e.g. "BT2A" and pin e.g. "-" should be printed to same label in form BT2A: -

NOTICE!
BATTERY CABLES NEED MARKINGS
SHOWN IN EXAMPLE BELOW. PRINTED EVERY 120mm.

EXEMPTION:
ALL BLACK WIRES
THIS MARKING IS NOT NEEDED.

MARKING

R2 ISO 6722 100V AWG6 +100 C

CABLE

EXAMPLE: RED 16mm2 WIRE MARKINGS.

MARKING SHOWN ABOVE ONLY TO CABLES LISTED BELOW.

LOOK FOR EQUIVALENT AWG SIZE FOR mm2
AND ADD THIS TO CABLE MARKINGS.

FOR EXAMPLE:
CABLE SIZE IS 25mm2 --> MARKING AWG3.

EQUIVALENCY:

mm2		AWG
10 mm2	=	AWG8
16 mm2	=	AWG6
25 mm2	=	AWG3
35 mm2	=	AWG2

-Q3
23655
Battery Combiner 80A, 2 batteries
Victron BCD 802

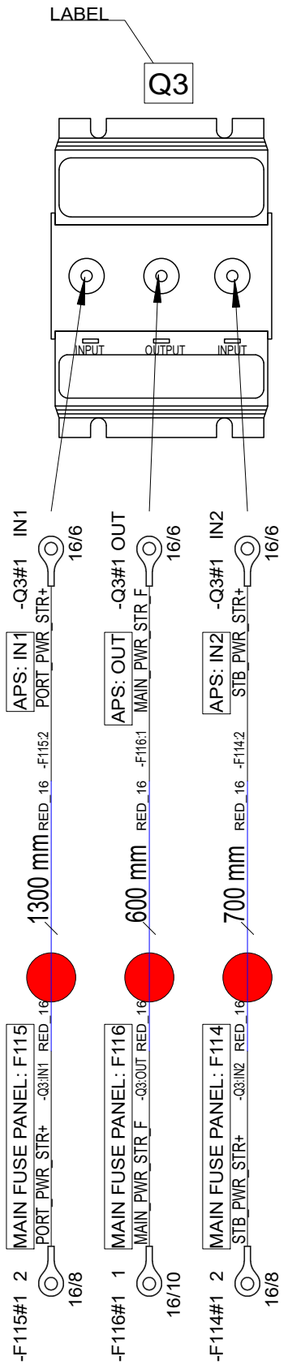

Date of modification	Modified by	Description
6.10.2023	PF	2004800; labels
12.2.2024	PF	B2: 2004979; Q3-F114: -300mm, Q3-F116: -400mm, Q3-F115: +300mm
28.5.2024	PF	C2: 2005089; Not modified

Date	3.4.2023
Drawing by	PF
Sheet rev.	2
Project rev.	C

NAVIX
Copyright by

Axopar Boat	Sub-product code	38698 Product code	2004468 Project ID
28 MK3 Boat model	POWER STEER CABLES NO JPO Title	HL Loc	61/ 106 Sheet

NOTICE! CABLES WITH STICKER

FOR EXAMPLE

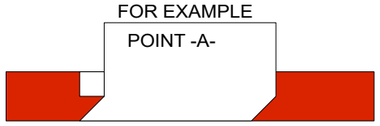

NOTICE!
BATTERY CABLES NEED MARKINGS
SHOWN IN EXAMPLE BELOW. PRINTED EVERY 120mm.

EXEMPTION:
ALL BLACK WIRES
THIS MARKING IS NOT NEEDED.

MARKING

R2 ISO 6722 100V AWG6 +100 C

CABLE

EXAMPLE: RED 16mm2 WIRE MARKINGS.

MARKING SHOWN ABOVE ONLY TO CABLES LISTED BELOW.

LOOK FOR EQUIVALENT AWG SIZE FOR mm2
AND ADD THIS TO CABLE MARKINGS.

FOR EXAMPLE:
CABLE SIZE IS 25mm2 --> MARKING AWG3.

EQUIVALENCY:

mm2		AWG
10 mm2	=	AWG8
16 mm2	=	AWG6
25 mm2	=	AWG3
35 mm2	=	AWG2

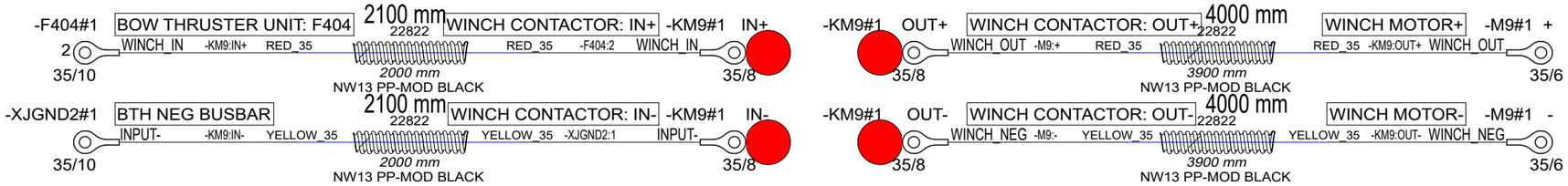

INCLUDED, CUSTOMER
INSTALLS TO BOW THRUSTER UNIT

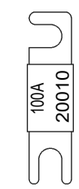

6.10.2023	PF	2004800; labels	Date	3.4.2023	NAVIX	Axopar		38699	2004468
28.5.2024	PF	C1: 2005089; Not modified	Drawing by	PF		Boat	Sub-product code	Product code	Project ID
9.8.2024	PF	C2: 2005089; KM9 in cables +400mm, conduits added	Sheet rev.	2		28 MK3	BOW ANCHOR WINCH CABLES	HL	62 / 106
Date of modification	Modified by	Description	Project rev.	C	Copyright by	Boat model	Title	Loc	Sheet

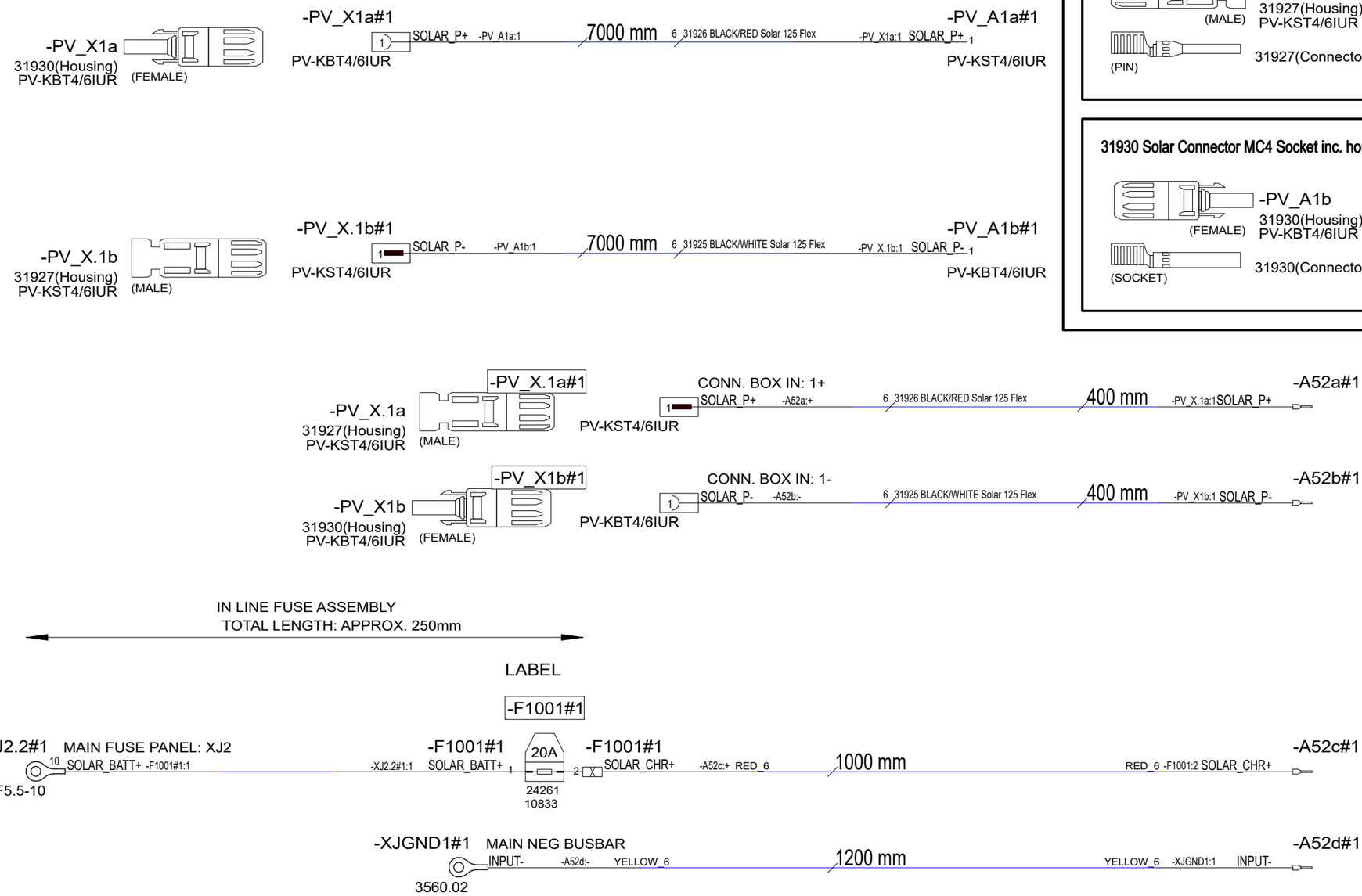

DELIVERED SEPARATELY

SOLAR CABLE CONNECTORS

31927 Solar Connector MC4 Pin inc. housing

-PV_A1a
31927(Housing)
PV-KST4/6IUR
(MALE)
(PIN)
31927(Connector)

31930 Solar Connector MC4 Socket inc. housing

-PV_A1b
31930(Housing)
PV-KBT4/6IUR
(FEMALE)
(SOCKET)
31930(Connector)

SOLAR PANEL CONNECTORS

31930 Solar Connector MC4 Socket inc. housing

-PV_A.1a1
31930(Housing)
PV-KBT4/6IUR
(FEMALE)
31927(Connector)
(SOCKET)

31927 Solar Connector MC4 Pin inc. housing

-PV_A.1b1
31927(Housing)
PV-KST4/6IUR
(MALE)
31930(Connector)
(PIN)

6.5.2024	PF	C1: 2005089; New product	Date	6.5.2024	NAVIX	Axopar		41389	2004468
			Drawing by	PF		Boat	Sub-product code	Product code	Project ID
			Sheet rev.	1		28 MK3	CCX SOLAR CABLES	HL	63 / 106
Date of modification	Modified by	Description	Project rev.	C	Copyright by	Boat model	Title	Loc	Sheet

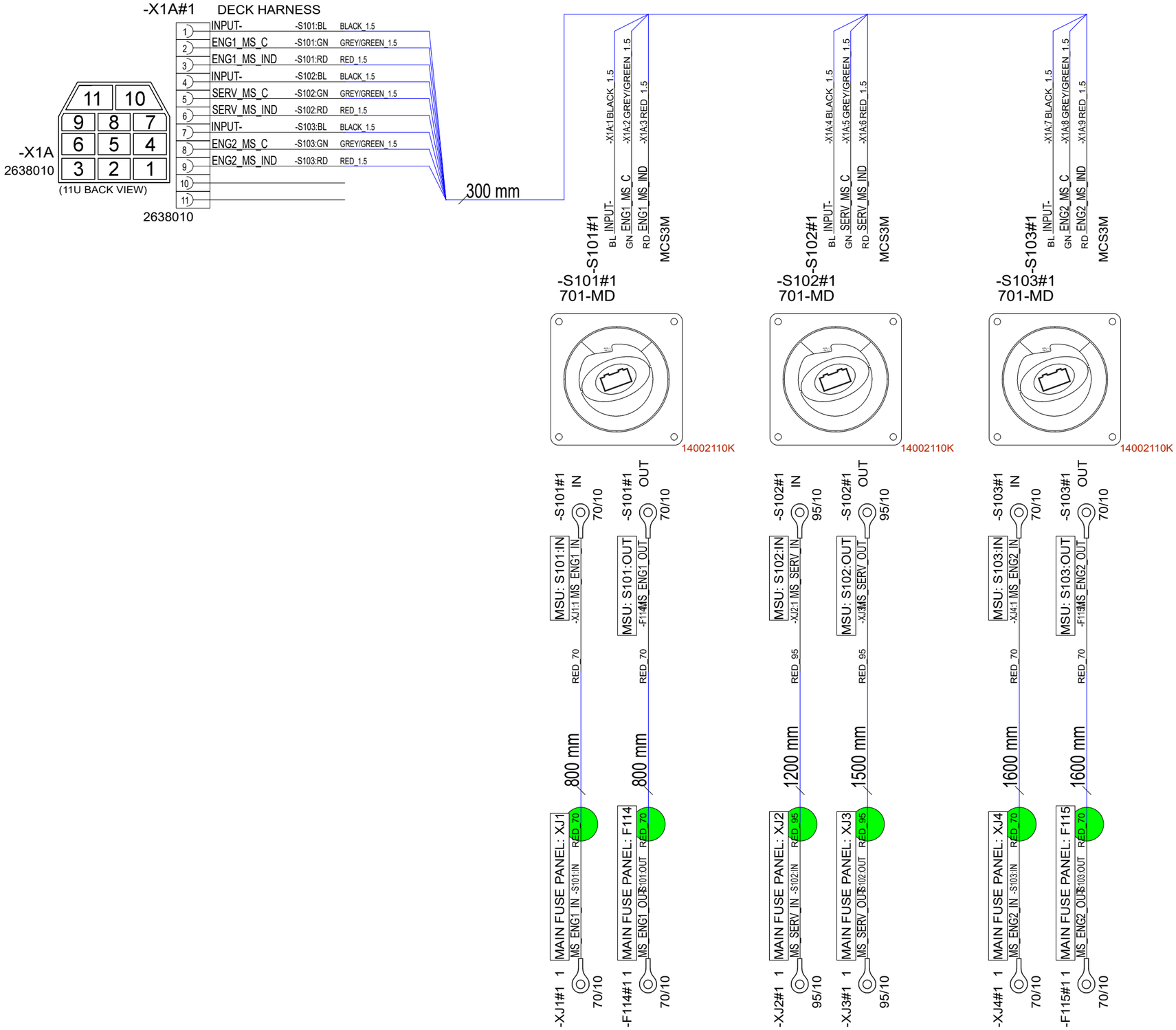

NOTICE! CABLES WITH STICKER

FOR EXAMPLE

POINT -A-

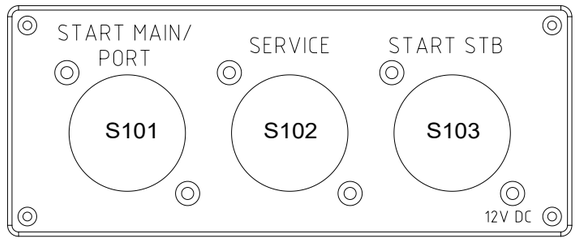

NOTICE!
BATTERY CABLES NEED TO ADD MARKINGS
SHOWN IN EXAMPLE BELOW.

EXEMPTION:
ALL BLACK WIRES
THIS MARKING IS NOT NEEDED.

MARKING

BT-SK 750V AWG2 +100 C

CABLE

EXAMPLE: RED 50mm2 WIRE MARKINGS.

MARKING SHOWN ABOVE ONLY TO CABLES LISTED BELOW.

LOOK FOR EQUIVALENT AWG SIZE FOR mm2
AND ADD THIS TO CABLE MARKINGS.

FOR EXAMPLE:
CABLE SIZE IS 70mm2 --> MARKING AWG2/0.

EQUIVALENCY:

mm2		AWG
25 mm2	=	AWG3
35 mm2	=	AWG2
50 mm2	=	AWG0
70 mm2	=	AWG2/0
95 mm2	=	AWG3/0
120 mm2	=	250 kcmil

Date of modification	Modified by	Description
6.10.2023	PF	A2: 2004800; R2-> BT-SK, labels
12.2.2024	PF	B3: 2004979; F115-S103: 800mm->1600mm
28.5.2024	PF	C3: 2005089; Not modified

Date	23.3.2023
Drawing by	PF
Sheet rev.	3
Project rev.	C

NAVIX
Copyright by

Axopar Boat		38682 Product code	2004468 Project ID
28 MK3 Boat model	MAIN SWITCH UNIT REMOTE Title	HL Loc	64 / 106 Sheet

38682_AXOPAR_28_MAIN_SWITCH_UNIT_REMOTE DUAL ENG.

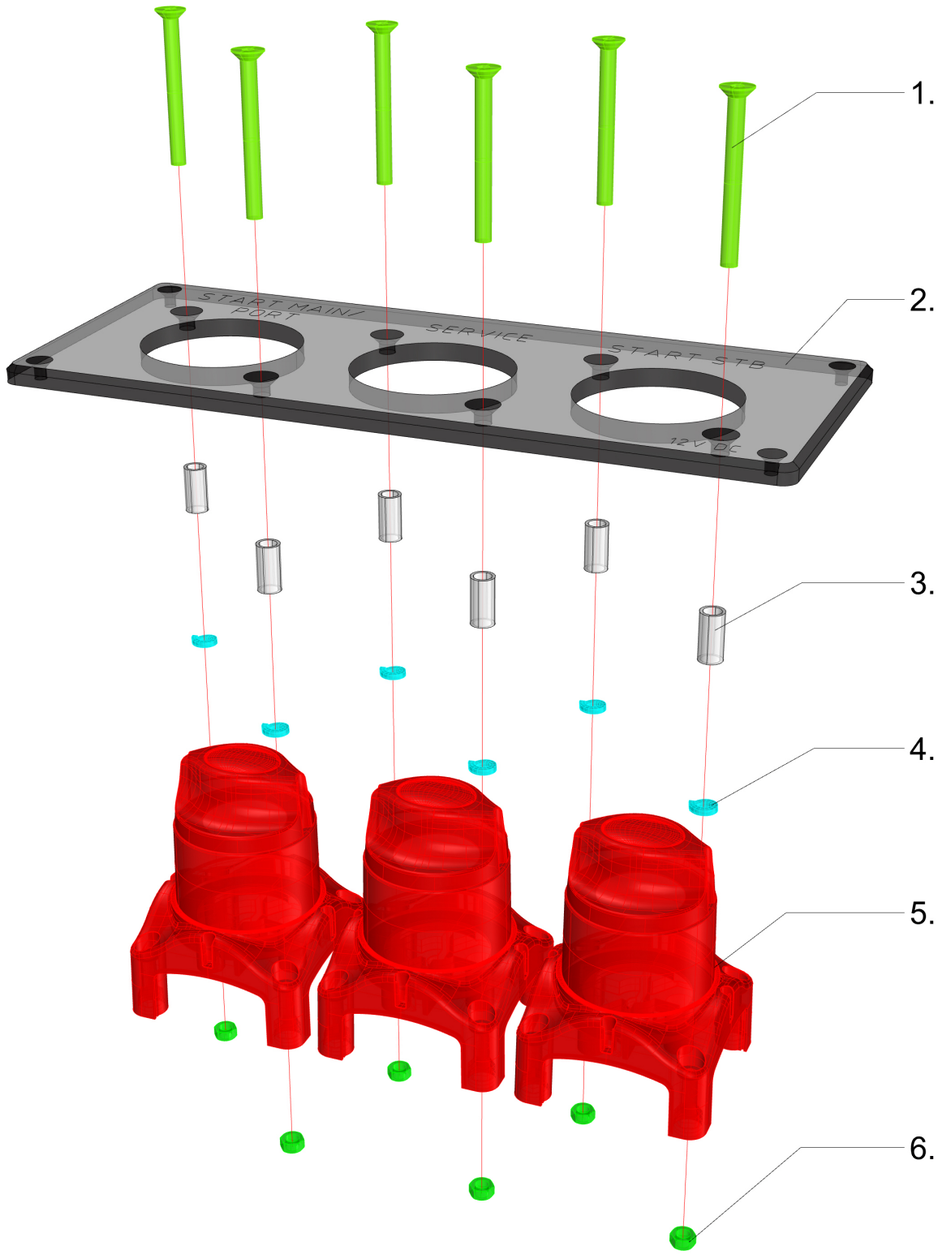

38682_AXOPAR_28_MAIN_SWITCH_UNIT_REMOTE DUAL ENG.

1. 6pcs VMI31811 - Countersunk head Screw HEX socket M5X50 DIN7991

2. 1pc 39053_AXOPAR_28_MSU_PANEL

3. 6pcs 6440 - HOLKKI NAVIX PÄÄKYTKIMEEN - halk. 8/6mm pituus 16mm

4. 6pcs VMI31540 - Spring Lock Washer M5 DIN127

5. 3pcs 14002110K Remote Controlled Battery Switch

6. 6pcs VMI31538 - HEX Nut M5 DIN934

16.05.-22 / TE

6.10.2023	PF	A2: 2004800; R2-> BT-SK, labels	Date	23.3.2023	NAVIX	Axopar		38682	2004468
12.2.2024	PF	B3: 2004979; F115-S103: 800mm->1600mm	Drawing by	PF		Boat	Sub-product code	Product code	Project ID
28.5.2024	PF	C3: 2005089; Not modified	Sheet rev.	3		28 MK3	MAIN SWITCH UNIT REMOTE	HL	65 / 106
Date of modification	Modified by	Description	Project rev.	C	Copyright by	Boat model	Title	Loc	Sheet

NOTICE! CABLES WITH STICKER

FOR EXAMPLE

POINT -A-

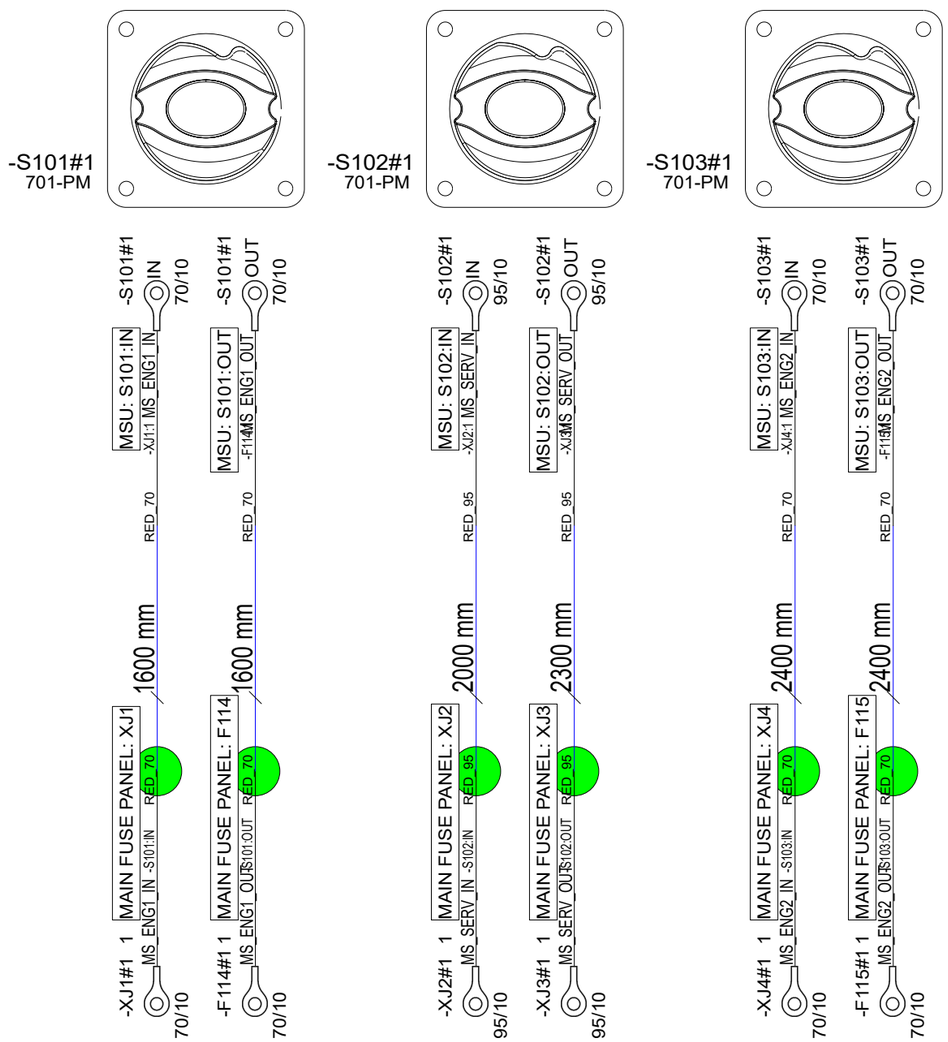

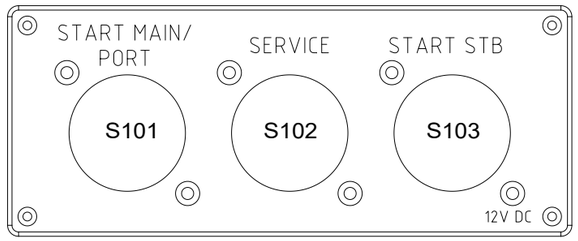

NOTICE!
BATTERY CABLES NEED TO ADD MARKINGS
SHOWN IN EXAMPLE BELOW.

EXEMPTION:
ALL BLACK WIRES
THIS MARKING IS NOT NEEDED.

MARKING

BT-SK 750V AWG2 +100 C

CABLE

EXAMPLE: RED 50mm2 WIRE MARKINGS.

MARKING SHOWN ABOVE ONLY TO CABLES LISTED BELOW.

LOOK FOR EQUIVALENT AWG SIZE FOR mm2
AND ADD THIS TO CABLE MARKINGS.

FOR EXAMPLE:
CABLE SIZE IS 70mm2 --> MARKING AWG2/0.

EQUIVALENCY:

mm2		AWG
25 mm2	=	AWG3
35 mm2	=	AWG2
50 mm2	=	AWG0
70 mm2	=	AWG2/0
95 mm2	=	AWG3/0
120 mm2	=	250 kcmil

Date of modification	Modified by	Description
6.10.2023	PF	A2: 2004800; R2-> BT-SK, labels
12.2.2024	PF	B3: 2004979; F115-S103: 1600mm->2400mm
28.5.2024	PF	C3: 2005089; Not modified

Date	23.3.2023
Drawing by	PF
Sheet rev.	3
Project rev.	C

NAVIX
Copyright by

Axopar Boat		38683 Product code	2004468 Project ID
28 MK3 Boat model	MAIN SWITCH UNIT MANUAL Title	HL Loc	66 / 106 Sheet

38683_AXOPAR_28_MAIN_SWITCH_UNIT_MANUAL DUAL ENG.

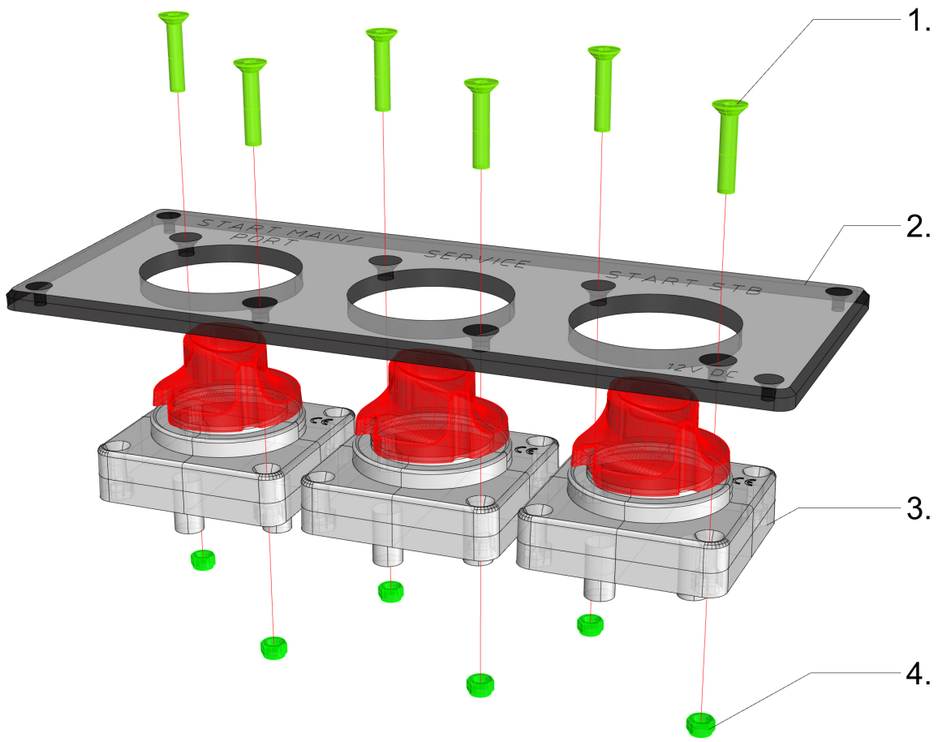

38683_AXOPAR_28_MAIN_SWITCH_UNIT_MANUAL DUAL ENG.

1. 6pcs VMI31807 - Countersunk head Screw HEX socket M5X25 DIN7991

2. 1pc 39053_AXOPAR_28_MSU_PANEL

3. 3pcs 701-PM - Battery Main Switch 275A, Panel Mounted - Bep 701B-PM

4. 6pcs VMI31539 - Self-locking HEX Nut M5 DIN985

16.05.-22 / TE

Date of modification	Modified by	Description
6.10.2023	PF	A2: 2004800; R2-> BT-SK, labels
12.2.2024	PF	B3: 2004979; F115-S103: 1600mm->2400mm
28.5.2024	PF	C3: 2005089; Not modified

Date	23.3.2023
Drawing by	PF
Sheet rev.	3
Project rev.	C

NAVIX

Copyright by

Axopar Boat	Sub-product code	38683 Product code	2004468 Project ID
28 MK3 Boat model	MAIN SWITCH UNIT MANUAL Title	HL Loc	67 / 106 Sheet

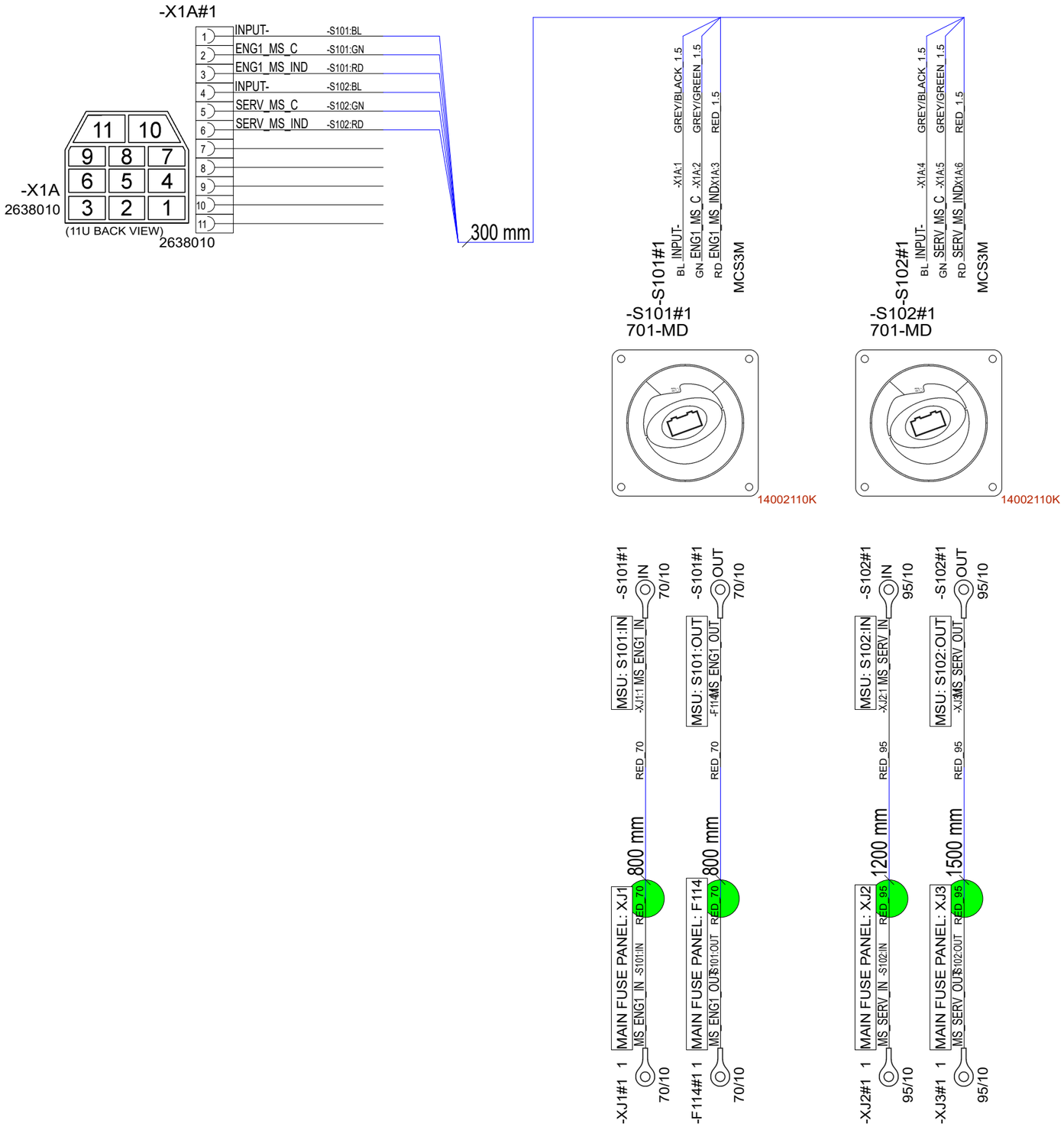

NOTICE! CABLES WITH STICKER

FOR EXAMPLE

POINT -A-

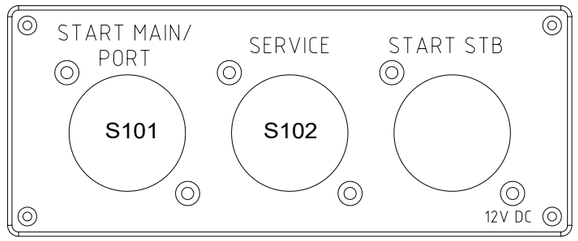

NOTICE!
BATTERY CABLES NEED TO ADD MARKINGS
SHOWN IN EXAMPLE BELOW.

EXEMPTION:
ALL BLACK WIRES
THIS MARKING IS NOT NEEDED.

MARKING

BT-SK 750V AWG2 +100 C

CABLE

EXAMPLE: RED 50mm2 WIRE MARKINGS.

MARKING SHOWN ABOVE ONLY TO CABLES LISTED BELOW.

LOOK FOR EQUIVALENT AWG SIZE FOR mm2
AND ADD THIS TO CABLE MARKINGS.

FOR EXAMPLE:
CABLE SIZE IS 70mm2 --> MARKING AWG2/0.

EQUIVALENCY:

mm2		AWG
25 mm2	=	AWG3
35 mm2	=	AWG2
50 mm2	=	AWG0
70 mm2	=	AWG2/0
95 mm2	=	AWG3/0
120 mm2	=	250 kcmil

Date of modification	Modified by	Description
6.10.2023	PF	A2: 2004800; R2-> BT-SK, labels
--	PF	B2: Not modified
28.5.2024	PF	C2: 2005089; Not modified

Date	25.4.2023
Drawing by	PF
Sheet rev.	2
Project rev.	C

NAVIX
Copyright by

Axopar Boat	Sub-product code	38909 Product code	2004468 Project ID
28 MK3 Boat model	MAIN SWITCH UNIT REMOTE SE Title	HL Loc	68 / 106 Sheet

38909_AXOPAR_28_MAIN_SWITCH_UNIT_REMOTE_SE

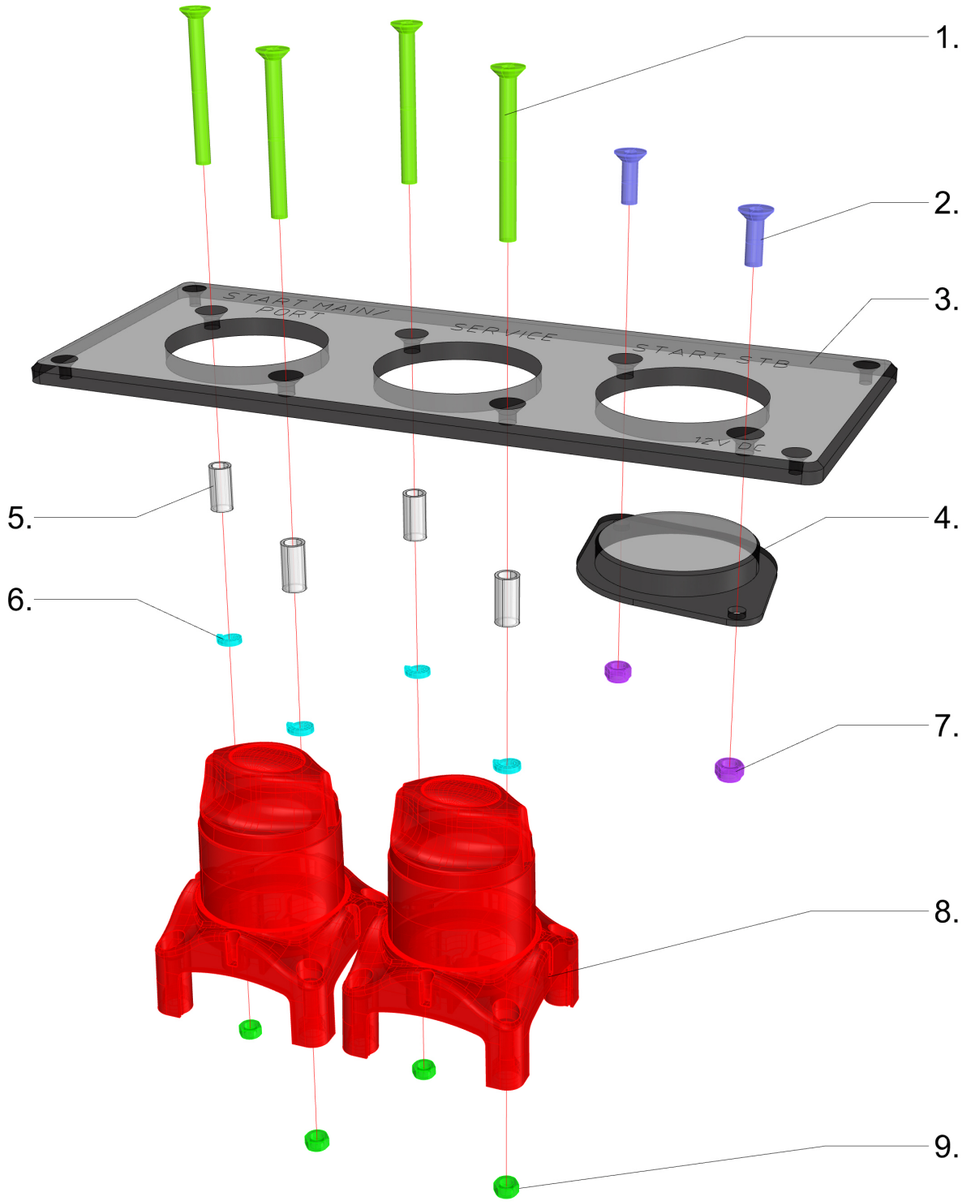

38909_AXOPAR_28_MAIN_SWITCH_UNIT_REMOTE_SE

1. 4pcs VMI31811 - Countersunk head Screw HEX socket M5X50 DIN7991

3. 2pc VMI31796 - Countersunk head Screw HEX socket M5X16 DIN7991

3. 1pc 39053_AXOPAR_28_MSU_PANEL

4. 1pc 39054_NAVIX_MS_PLUG_BEP_HPL

5. 4pcs 6440 - HOLKKI NAVIX PÄÄKYTKIMEEN - halk. 8/6mm pituus 16mm

6. 4pcs VMI31540 - Spring Lock Washer M5 DIN127

7. 2pcs VMI31539 - Self-locking HEX Nut M5 DIN985

8. 2pcs 14002110K Remote Controlled Battery Switch

9. 4pcs VMI31538 - HEX Nut M5 DIN934

16.05.-22 / TE

6.10.2023	PF	A2: 2004800; R2-> BT-SK, labels	Date	25.4.2023	NAVIX	Axopar		38909	2004468
--	PF	B2: Not modified	Drawing by	PF		Boat	Sub-product code	Product code	Project ID
28.5.2024	PF	C2: 2005089; Not modified	Sheet rev.	2		28 MK3	MAIN SWITCH UNIT REMOTE SE	HL	69 / 106
Date of modification	Modified by	Description	Project rev.	C	Copyright by	Boat model	Title	Loc	Sheet

NOTICE! CABLES WITH STICKER

FOR EXAMPLE

POINT -A-

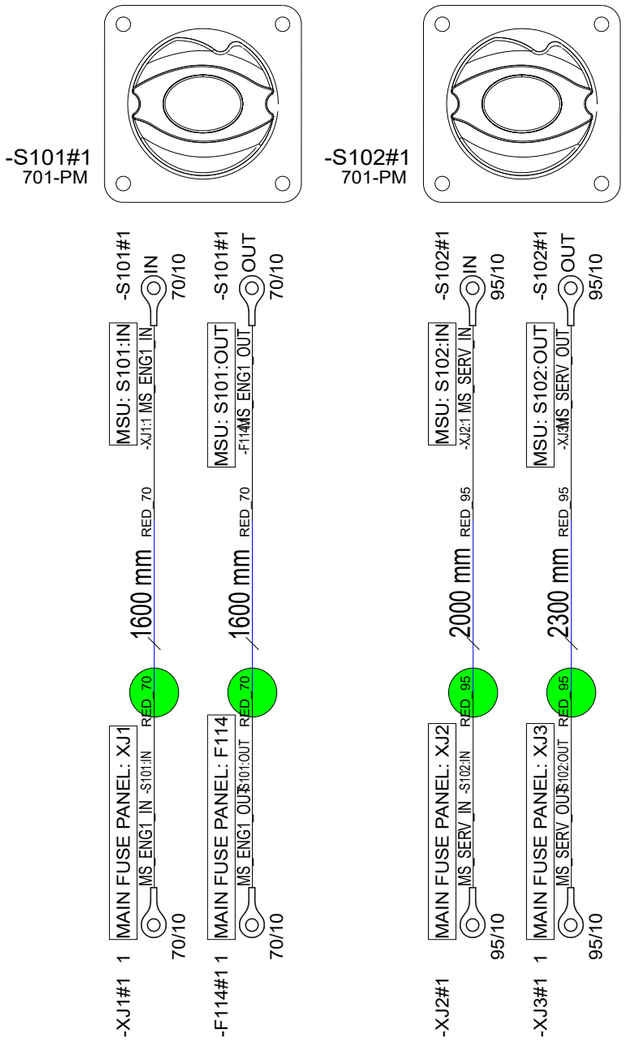

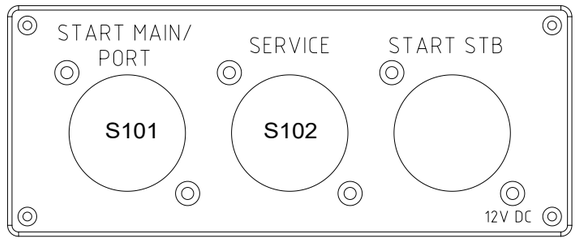

NOTICE!
BATTERY CABLES NEED TO ADD MARKINGS
SHOWN IN EXAMPLE BELOW.

EXEMPTION:
ALL BLACK WIRES
THIS MARKING IS NOT NEEDED.

MARKING

BT-SK 750V AWG2 +100 C

CABLE

EXAMPLE: RED 50mm2 WIRE MARKINGS.

MARKING SHOWN ABOVE ONLY TO CABLES LISTED BELOW.

LOOK FOR EQUIVALENT AWG SIZE FOR mm2
AND ADD THIS TO CABLE MARKINGS.

FOR EXAMPLE:
CABLE SIZE IS 70mm2 --> MARKING AWG2/0.

EQUIVALENCY: mm2		AWG
25 mm2	=	AWG3
35 mm2	=	AWG2
50 mm2	=	AWG0
70 mm2	=	AWG2/0
95 mm2	=	AWG3/0
120 mm2	=	250 kcmil

Date of modification	Modified by	Description
6.10.2023	PF	A2: 2004800; R2-> BT-SK, labels
--	PF	B2: Not modified
28.5.2024	PF	C2: 2005089; Not modified

Date	25.4.2023
Drawing by	PF
Sheet rev.	2
Project rev.	C

NAVIX

Copyright by

Axopar		38910	2004468
Boat	Sub-product code	Product code	Project ID
28 MK3	MAIN SWITCH UNIT MANUAL SE	HL	70 / 106
Boat model	Title	Loc	Sheet

38910_AXOPAR_28_MAIN_SWITCH_UNIT_MANUAL_SE

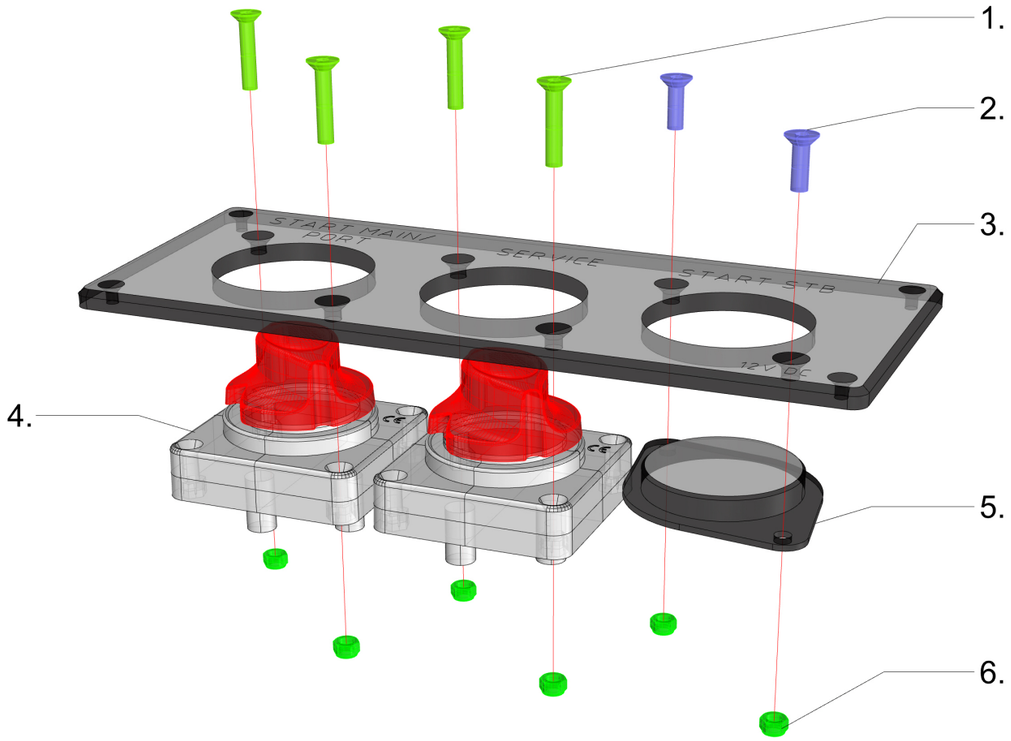

38910_AXOPAR_28_MAIN_SWITCH_UNIT_MANUAL_SE

1. 4pcs VMI31807 - Countersunk head Screw HEX socket M5X25 DIN7991

2. 2pcs VMI31796 - Countersunk head Screw HEX socket M5X16 DIN7991

3. 1pc 39053_AXOPAR_28_MSU_PANEL

4. 2pcs 701-PM - Battery Main Switch 275A, Panel Mounted - Bep 701B-PM

5. 1pc 39054_NAVIX_MS_PLUG_BEP_HPL

6. 6pcs VMI31539 - Self-locking HEX Nut M5 DIN985

16.05.-22 / TE

6.10.2023	PF	A2: 2004800; R2-> BT-SK, labels	Date 25.4.2023	NAVIX	Axopar		38910	2004468
--	PF	B2: Not modified	Drawing by PF		Boat	Sub-product code	Product code	Project ID
28.5.2024	PF	C2: 2005089; Not modified	Sheet rev. 2		28 MK3	MAIN SWITCH UNIT MANUAL SE	HL	71/ 106
Date of modification	Modified by	Description	Project rev. C	Copyright by	Boat model	Title	Loc	Sheet

38684_AXOPAR_28_MAIN_FUSE_PANEL

38684_AXOPAR_28_MAIN_FUSE_PANEL

1. 4pcs VMI31829 - HEX socket Head Cap Screw M6X20 DIN912
 BACKSIDE OF 39046
 4pcs VMI31826 - Self-locking HEX Nut M6 DIN985

2. 1pc 40936_AXOPAR_28_MK3_SUPPORT_BRACKET_V1
 + ZIPTIES

DETAIL 1.

1. 1pc 34642 CFBAR1-250SP SINGLE STUD

 1pc VMI36860 HEX NUT 1/4" "UNC A4
 1pc VMI31830 SPRING LOCK WASHER M6 DIN127
 1pc VMI31831 FLAT WASHER FOR HEX BOLTS AND NUTS M6 DIN125A
 1pc VMI36859 FLAT WIDE WASHER FOR HEX BOLTS AND NUTS M6
 1pc 34641 -B.6 CFCOVER-1R SINGLE STUD/RED
 1pc 34640 -PS_F.6 CUBE FUSE MRFB-080 80A

2. 1pc VMI32012 HEX NUT M8 DIN934
 1pc VMI32013 FLAT WASHER FOR HEX BOLT
 1pc VMI32011 SPRING LOCK WASHER M8 DIN127

3. 2pcs VMI30917 COUNTERSUNK HEAD SCREW HEX SOCKET M4X16 DIN7991

4. 1pc VMI32019 - HEX Bolt Full thread M8X30 DIN933

5. 1pc
39047_NAVIX_LINE_CUBE_FUSE_HOLDER_SINGLE_V1

3. 1pc 39058_NAVIX_LINE_BUS_BAR_TYPE5C_6X
 1pc VMI32012 HEX NUT M8 DIN934
 1pc VMI32013 FLAT WASHER FOR HEX BOLT
 1pc VMI32011 SPRING LOCK WASHER M8 DIN127
 1pc VMI32018 HEX BOLT FULL THREAD M8X25 DIN933

4. 1pc 39057_NAVIX_LINE_BUS_BAR_TYPE5C_3X
 1pc VMI32012 HEX NUT M8 DIN934
 1pc VMI32013 FLAT WASHER FOR HEX BOLT
 1pc VMI32011 SPRING LOCK WASHER M8 DIN127
 1pc VMI32018 HEX BOLT FULL THREAD M8X25 DIN933

5. 8pcs 90001_NAVIX_LINE_ANL_HOLDER_TYPE5

6. 1pc
39046_AXOPAR_28_MAIN_FUSE_PANEL_PLATE_V2

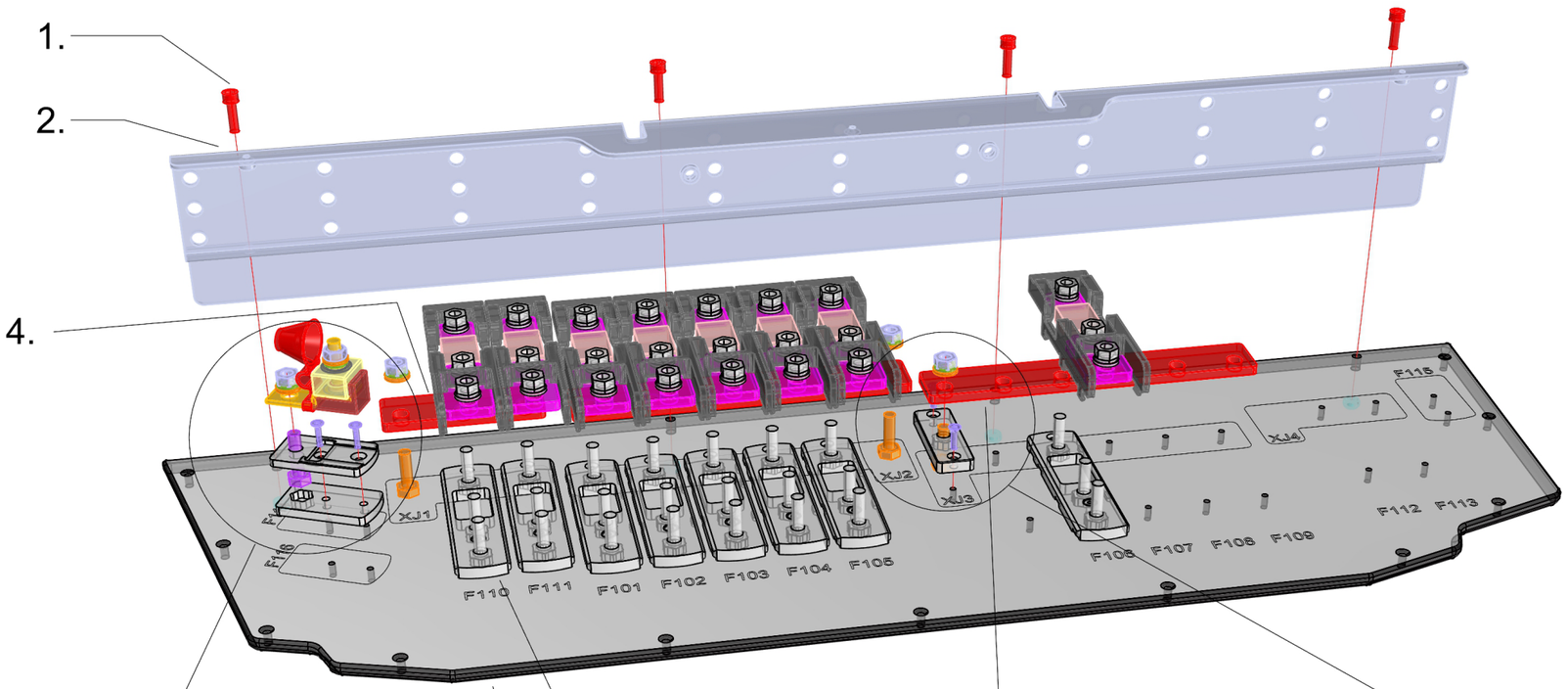

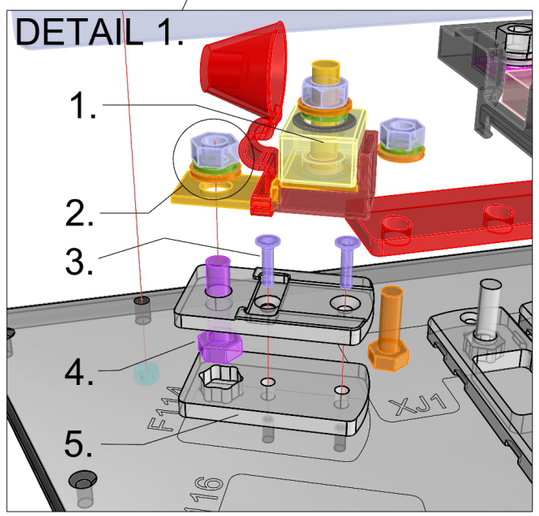

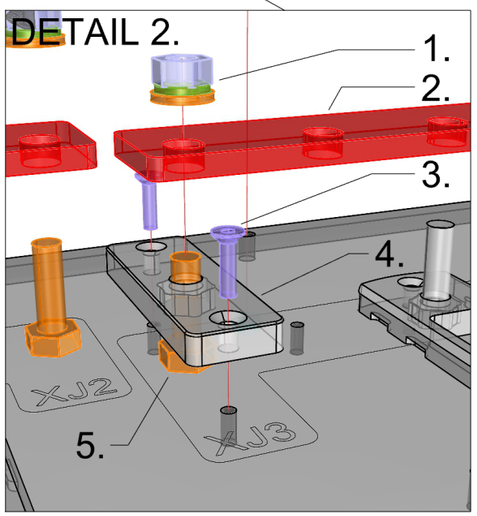

DETAIL 2.

1. 1pc VMI32012 HEX NUT M8 DIN934
 1pc VMI32013 FLAT WASHER FOR HEX BOLT
 1pc VMI32011 SPRING LOCK WASHER M8 DIN127

2. 1pc
39058_NAVIX_LINE_BUS_BAR_TYPE5C_6X

3. 2pcs VMI30917 COUNTERSUNK HEAD SCREW HEX SOCKET M4X16 DIN7991

4. 1pc
39048_NAVIX_LINE_BOLT_BASE_1_V1

5. 1pc VMI32018 HEX BOLT FULL THREAD M8X25 DIN933

16.05.-23 / TE
27.02.-24 / TS

Date of modification	Modified by	Description
27.2.2024	PF	B2: 2004979; Fuses repositioned (F115 moved prt->stb)
30.4.2024	PF	C2: 2005089; Not modified

Date	3.4.2023
Drawing by	PF
Sheet rev.	2
Project rev.	C

NAVIX
Copyright by

Axopar Boat		38684 Product code	2004468 Project ID
28 MK3 Boat model	MAIN FUSE PANEL Title	HL Loc	72 / 106 Sheet

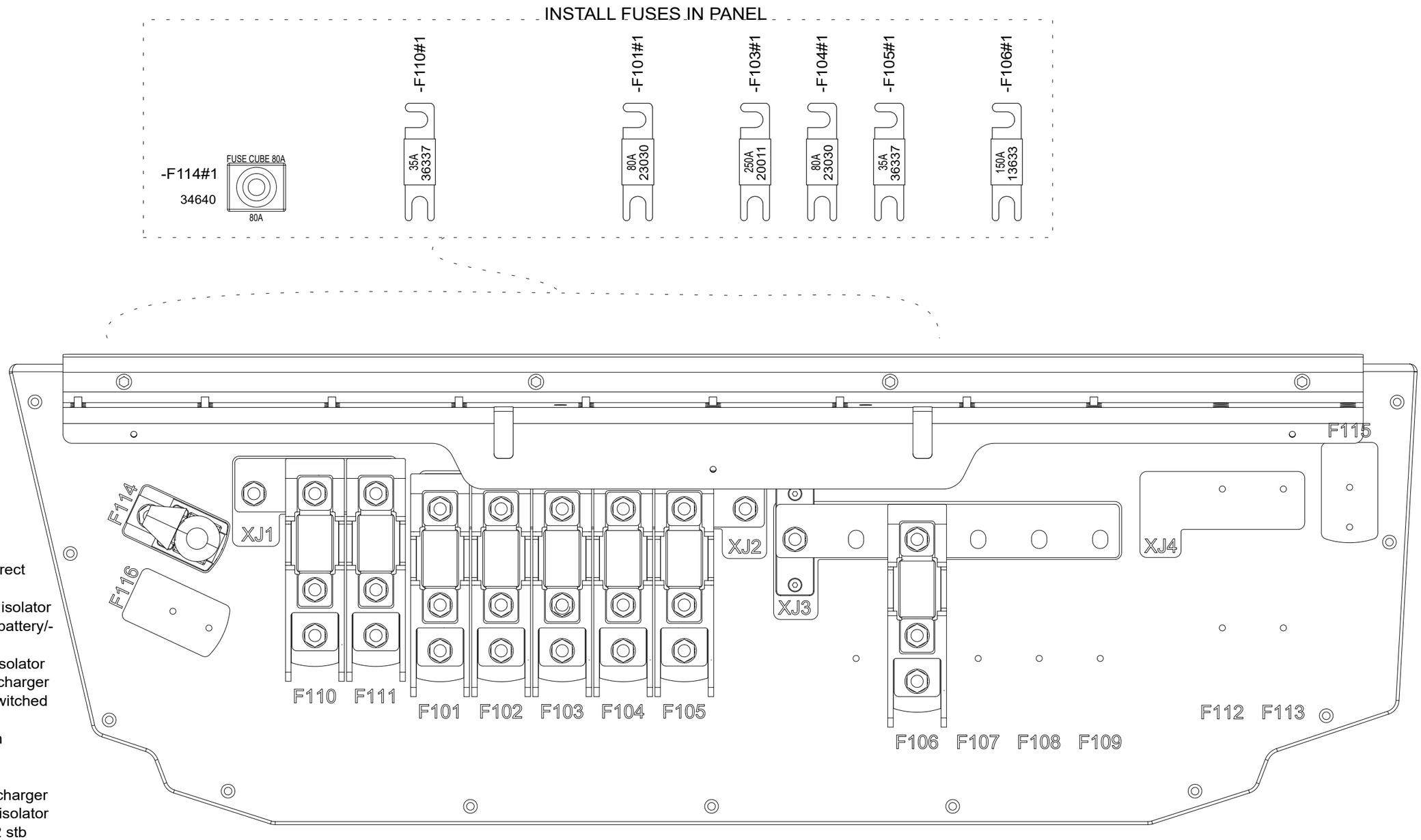

FUSE FUNCTION
F101 To console, direct main supply
F102 From Q1 port isolator
F103 From service battery/-ies
F104 From Q2 stb isolator
F105 From battery charger
F106 To console, switched main supply
F107 OPT aft winch
F108 OPT gyro
F109 OPT amplifier
F110 From battery charger
F111 From Q1 port isolator
F112 OPT From Q2 stb isolator
F113 OPT From battery charger
F114 OPT APS or POWER STEERING PUMP
F115 OPT APS or POWER STEERING PUMP
F116 OPT APS

Date of modification	Modified by	Description
27.2.2024	PF	B2: 2004979; Fuses repositioned (F115 moved prt->stb)
30.4.2024	PF	C2: 2005089; Not modified

Date	23.3.2023
Drawing by	PF
Sheet rev.	2
Project rev.	C

NAVIX
Copyright by

Axopar Boat	Sub-product code	38684 Product code	2004468 Project ID
28 MK3 Boat model	MAIN FUSE PANEL Title	HL Loc	73 / 106 Sheet

FRONT VIEW

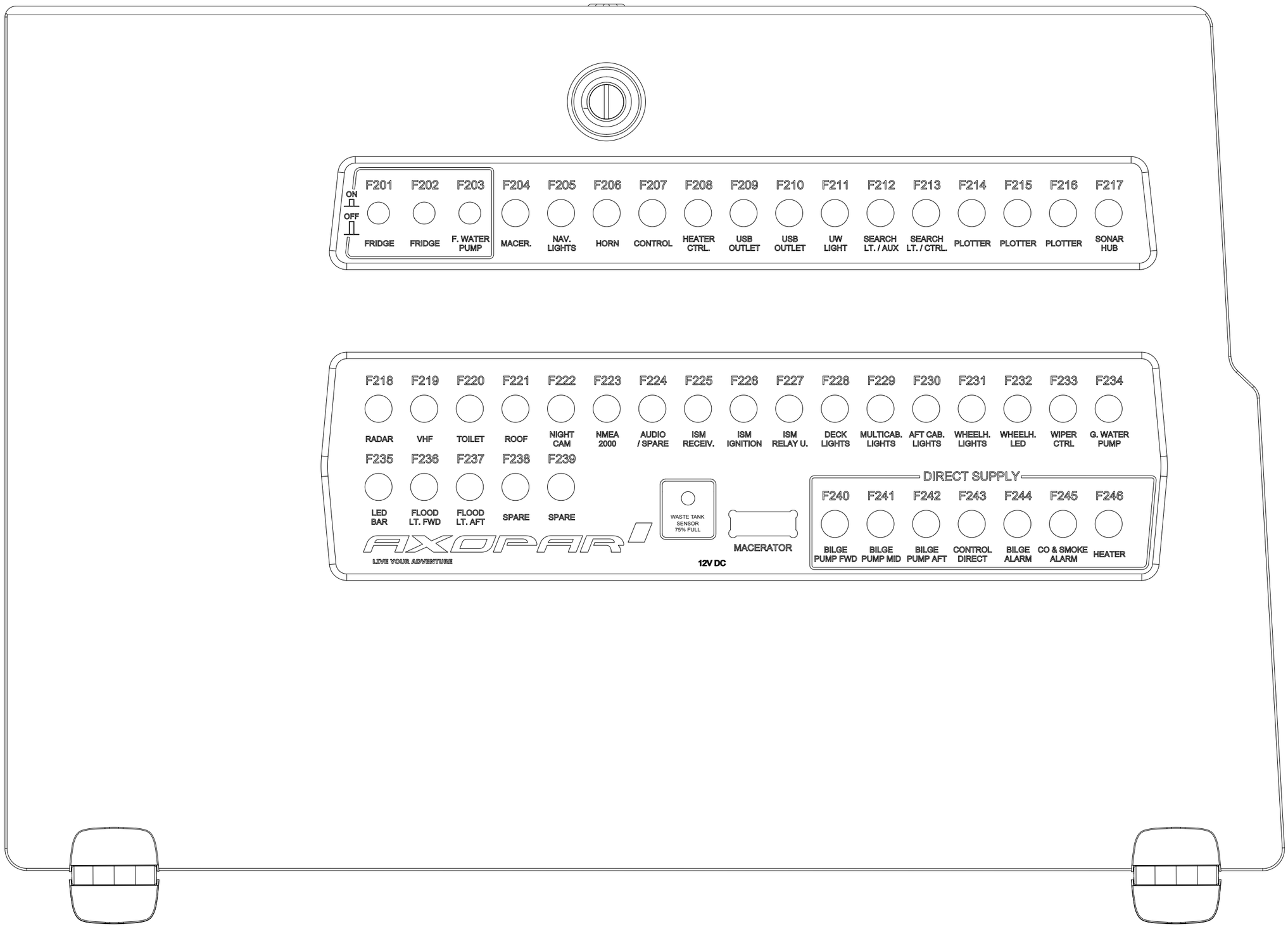

Date of modification	Modified by	Description
19.12.2023	PF	C2:Rel.type->u, fuse no.s, added K206-K213 & F235-F239, input+ rearr.
1.10.2024	PF	C3: 2005259; F228 10A->3A, X2F added, F209 text change

Date	10.11.2023
Drawing by	PF
Sheet rev.	3
Project rev.	C

NAVIX
Copyright by

Axopar Boat		40139 Product code	2004468 Project ID
28 MK3 Boat model	FUSE UNIT ANTH Title	HL Loc	74 / 106 Sheet

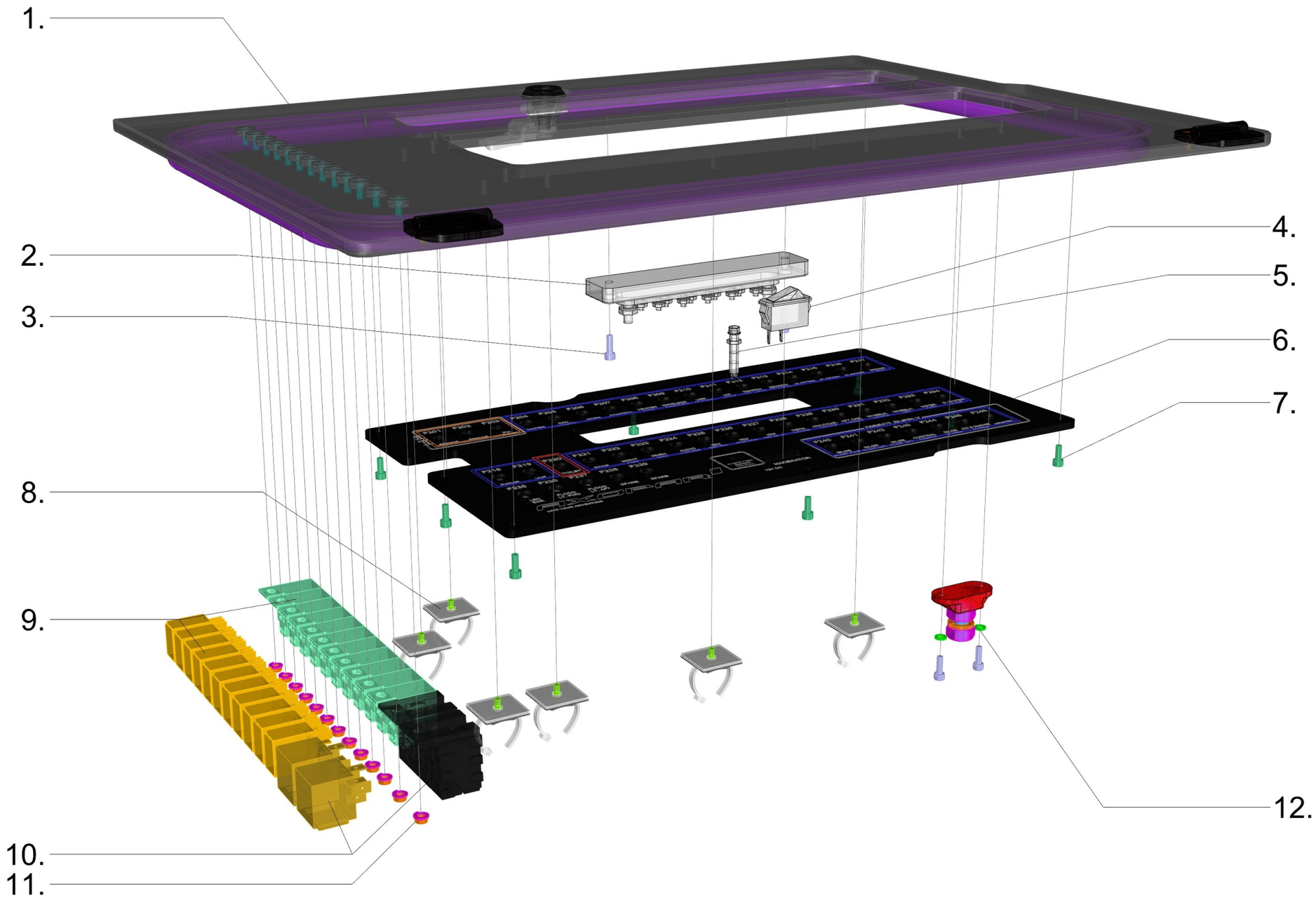

40139_AXOPAR_28_MK3_FUSE_UNIT_ANTH

1. 1 PC
40178_AXOPAR_28_MICROCAB_AFT_WALL_PANEL_ANTH_LOW_PORT_V2

2. 1 PC 28042 - Busbar 10 Gang 150A - Blue Sea 2301

3. 2 PCS VMI30943 HEX SOCKET HEAD CAP SCREW M4X10 DIN912
3.1 2 PCS VMI30906 FLAT WASHER FOR HEX BOLTS AND NUTS M4 DIN125A

4. 1 PC C1501ABBB - KYTKIN 0-1 MOM MUSTA/PUN, MATTA - Arcolectric C1501ABBB

5. 1 PC 19030253 LED PANEL MOUNT INDICATOR, SATIN CHROME BEZEL. RED. 12 VDC, 6mm 20mA, 13MCD, IP40

6. 1 PC 42025_AXOPAR_28_FUSE_PANEL_PLATE_BLACK_V2
42 PCS CARLING CMB SERIES (AS IN DIAGRAM)
1 PC CARLING CLB SERIES (AS IN DIAGRAM)
3 PCS DD FUSE (AS IN DIAGRAM)

7. 8 PCS VMI30943 - HEX socket Head Cap Screw M4X10 DIN912

8. 6 PCS VMI36559 - Self Adhesive Black Cable Tie Mount 5,3mm
6 PCS VMI30913 - Countersunk head Screw HEX socket M4X8 DIN7991
6 PCS ZIP TIES

9. 11 PCS RELAY (AS IN DIAGRAM)

10. 2 PCS RELAY (AS IN DIAGRAM)

11. 13 PCS VMI30904 SPRING LOCK WASHER M4 DIN127
13 PCS VMI30905 HEX NUT M4 DIN934

12. 1 PC 36213 - Insulated Stud, Red - Bep IS-10MM-1R
2 PCS VMI30942 HEX SOCKET HEAD CAP SCREW M4X8 DIN912
2 PCS VMI30906 - Flat Washer for HEX bolts and nuts M4 DIN125A

10.11.2023 / TS (2004937)
12.08.2004 / JS (2005207)
24.10.2024 / TS (2005259)

Date of modification	Modified by	Description
19.12.2023	PF	C2:Rel.type->u, fuse no.s, added K206-K213 & F235-F239, input+ rearr.
1.10.2024	PF	C3: 2005259; F228 10A->3A, X2F added, F209 text change

Date	10.11.2023
Drawing by	PF
Sheet rev.	3
Project rev.	C

NAVIX
Copyright by

Axopar Boat		40139 Product code	2004468 Project ID
28 MK3 Boat model	FUSE UNIT ANTH Title	HL Loc	75 / 106 Sheet

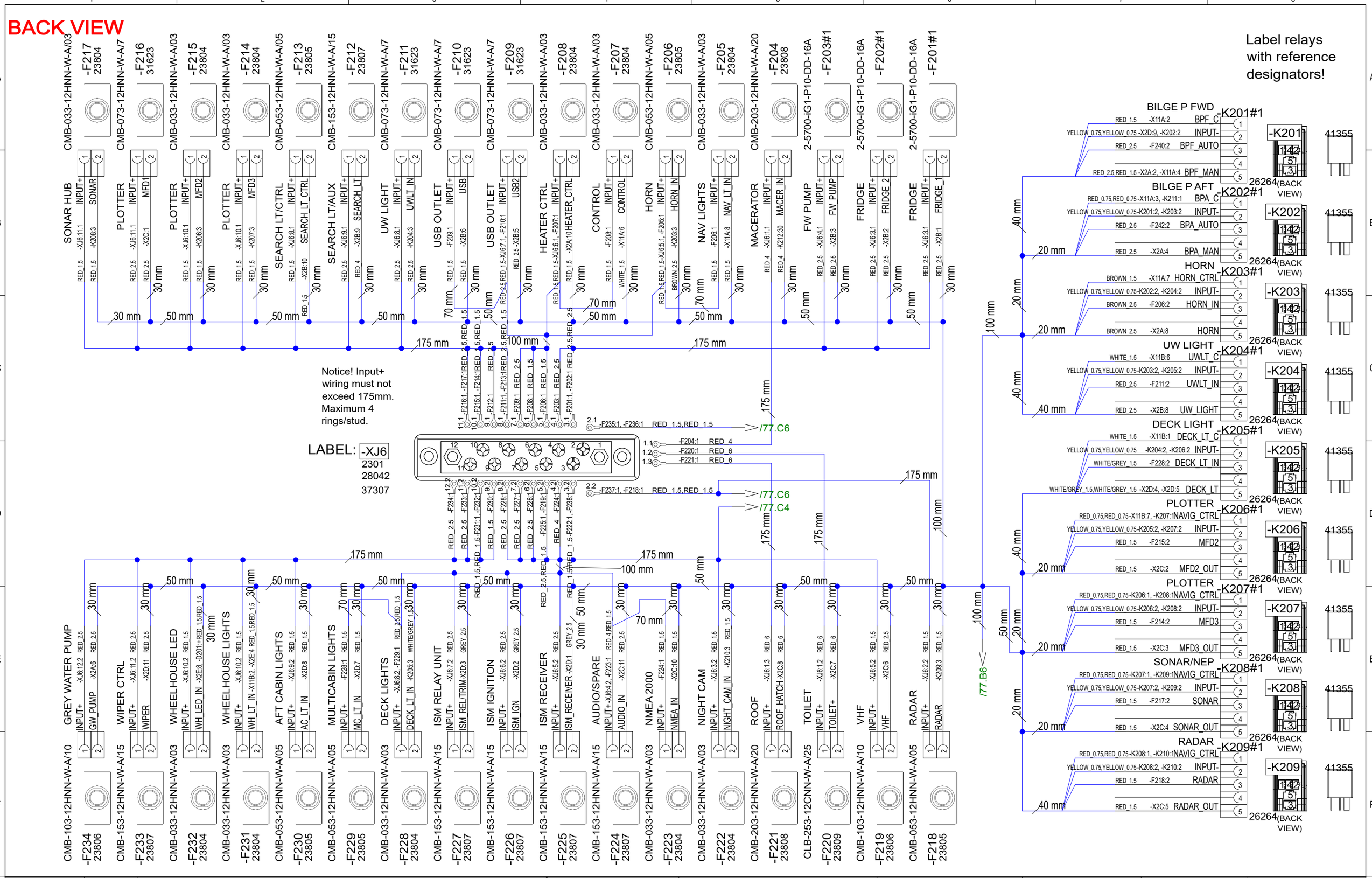

19.12.2023	PF	C2:Rel.type->u, fuse no.s, added K206-K213 & F235-F239, input+ rearr.	Date 24.3.2023	NAVIX	Axopar		
1.10.2024	PF	C3: 2005259; F228 10A->3A, X2F added, F209 text change	Drawing by PF		Boat	Sub-product code	40139 Product code	2004468 Project ID
			Sheet rev. 3		28 MK3	FUSE UNIT ANTH	HL
Date of modification	Modified by	Description	Project rev. C	Copyright by	Boat model	Title	Loc	76 / 106 Sheet

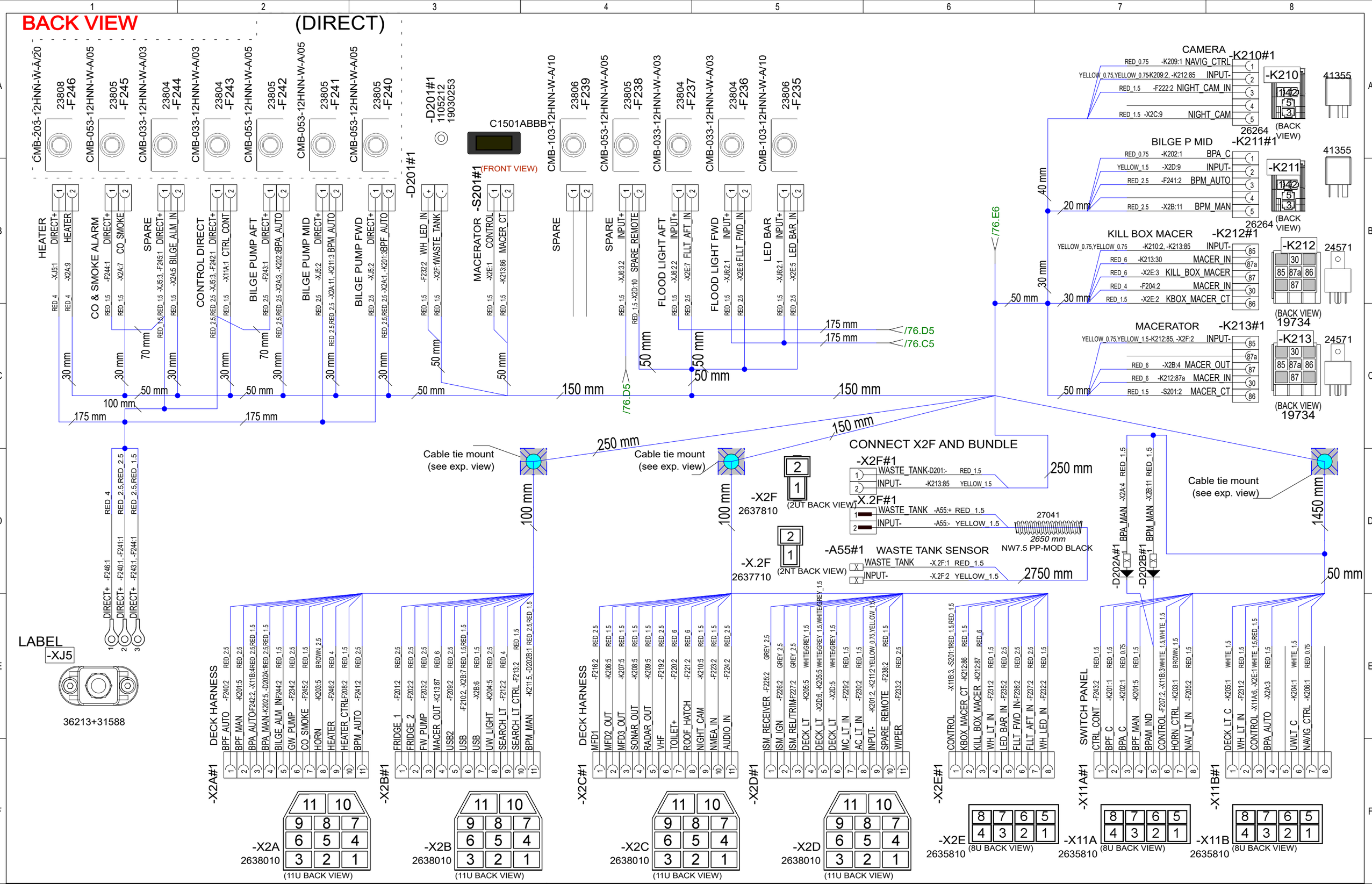

19.12.2023	PF	C2:Rel.type->u, fuse no.s, added K206-K213 & F235-F239, input+ rearr.	Date 17.4.2023	NAVIX	Axopar		40139 / 2004468
1.10.2024	PF	C3: 2005259; F228 10A->3A, X2F added, F209 text change	Drawing by PF		Boat	Sub-product code / Product code	Project ID
			Sheet rev. 3		28 MK3	FUSE UNIT ANTH	HL
Date of modification	Modified by	Description	Project rev. C	Copyright by	Boat model	Title	Loc / 77 / 106 Sheet

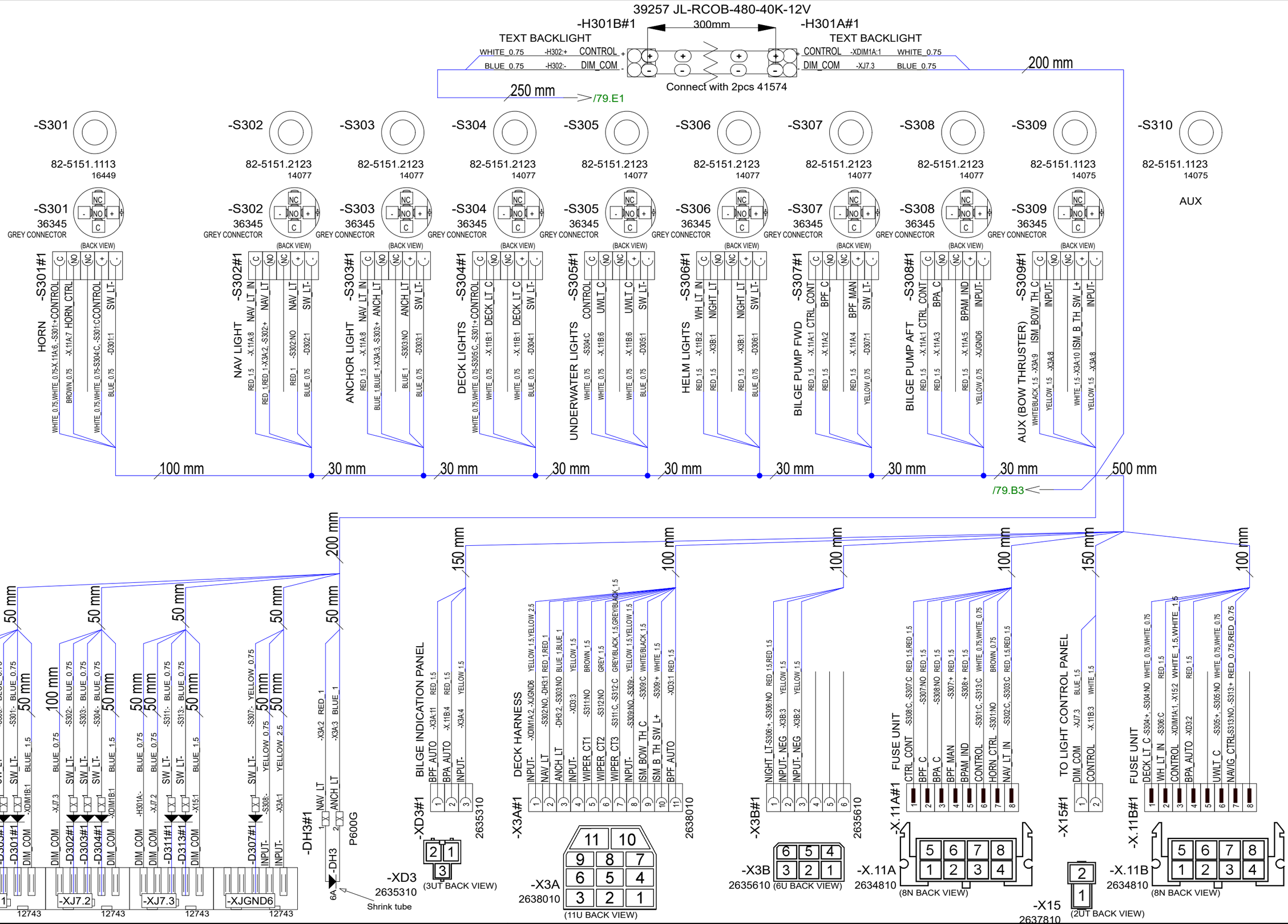

14.10.2024	PF	C5: 2005259; S313 +200mm, pinbolts	Date	23.3.2023	Axopar		38686 / 2004468
5.1.2024	PF	B3: 2004980; ---	Drawing by	PF	Boat	Sub-product code / Product code	Project ID
30.4.2024	PF	C4: 2005089; Light pack and MY25 changes	Sheet rev.	5	28 MK3	SWITCH PANEL	HL
Date of modification	Modified by	Description	Project rev.	C	Boat model	Title	Loc

NAVIX

Copyright by

Sheet: 78 / 106

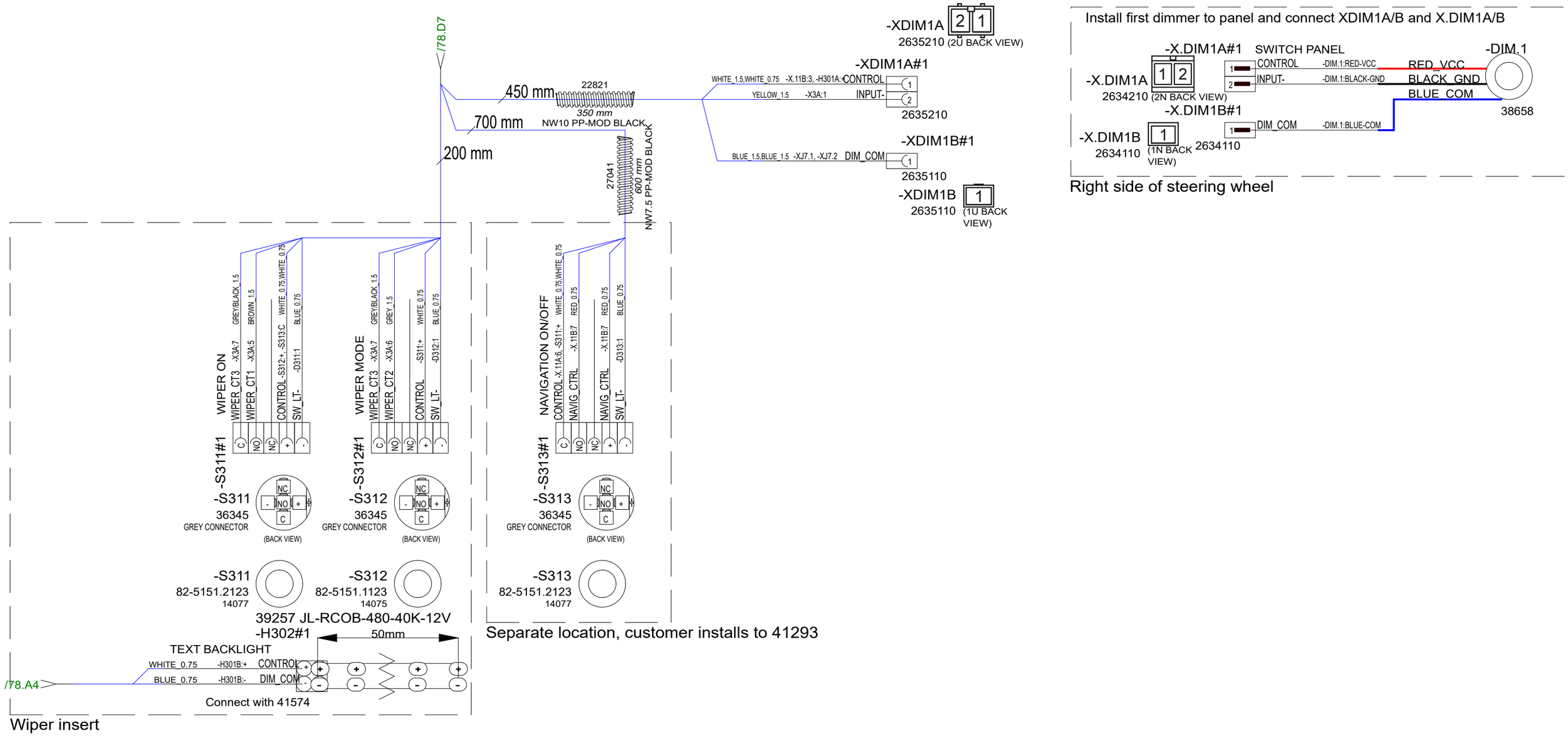

14.10.2024	PF	C5: 2005259; S313 +200mm, pinbolts	Date	30.4.2024	NAVIX	Axopar		38686	2004468
5.1.2024	PF	B3: 2004980; ---	Drawing by	PF		Boat	Sub-product code	Product code	Project ID
30.4.2024	PF	C4: 2005089; Light pack and MY25 changes	Sheet rev.	5		28 MK3	SWITCH PANEL	HL	79 / 106
Date of modification	Modified by	Description	Project rev.	C	Copyright by	Boat model	Title	Loc	Sheet

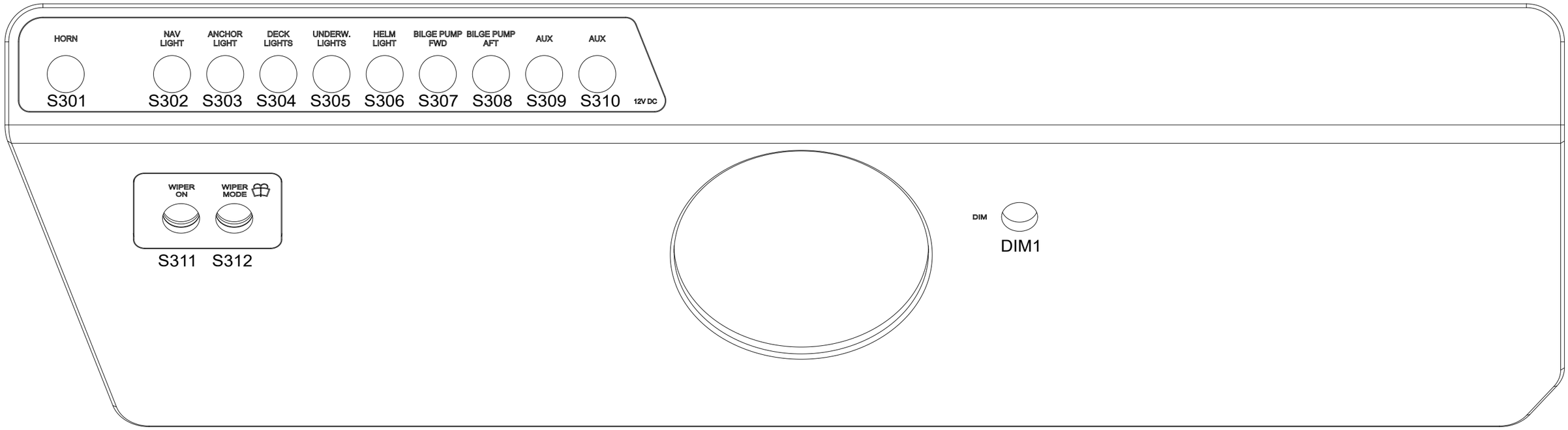

14.10.2024	PF	C5: 2005259; S313 +200mm, pinbolts	Date 19.4.2023	NAVIX	Axopar		38686	2004468
5.1.2024	PF	B3: 2004980; ---	Drawing by PF		Boat	Sub-product code	Product code	Project ID
30.4.2024	PF	C4: 2005089; Light pack and MY25 changes	Sheet rev. 5		28 MK3	SWITCH PANEL	HL	80 / 106
Date of modification	Modified by	Description	Project rev. C	Copyright by	Boat model	Title	Loc	Sheet

38686_AXOPAR_28_SWITCH_PANEL

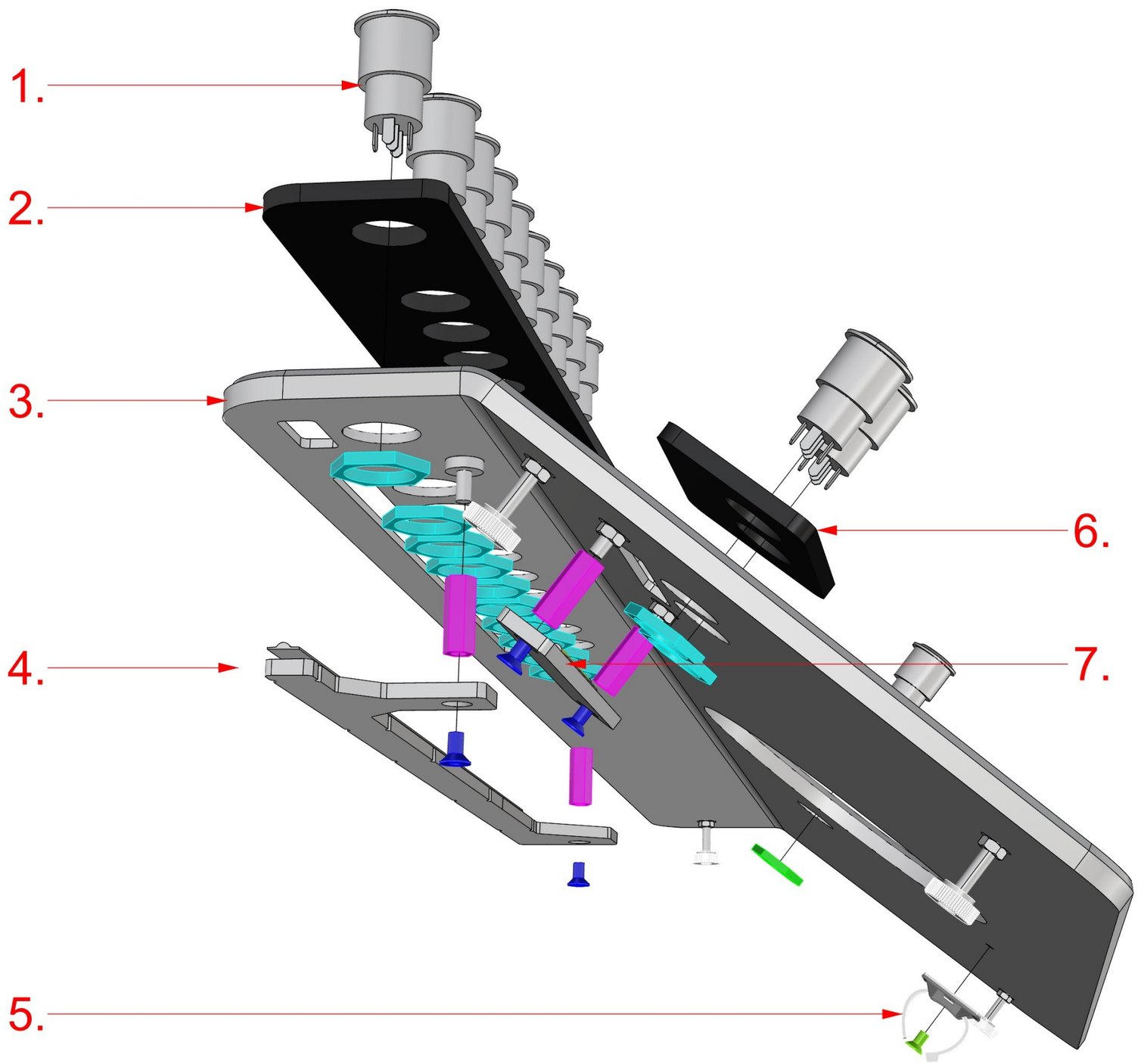

38686_AXOPAR_28_SWITCH_PANEL

1. 13PCS HALO SWITCH (AS IN DIAGRAM)

2. 1PC 39239_AXOPAR_28_SWITCH_PANEL_INSERT_PORT

3. 1PC 39271_AXOPAR_28_SWITCH_PANEL_BASE_V3

4. 1PC 41504_AXOPAR_28_SWITCH_PANEL_LED_HOLDER_LONG_V2
39257 - LED-Strip RCOB 12V 3800-4300K 5m/reel - JL-RCOB-480-40K-12V (300mm)
2pcs VMI32036 EXTENSION BOLT M4 L-20
2pcs VMI30913 COUNTERSUNK HEAD SCREW HEX SOCKET M4X8 DIN7991

5. 1PC VMI36559 - Self Adhesive Black Cable Tie Mount 5,3mm
VMI30913 - Countersunk head Screw HEX socket M4X8 DIN7991

6. 1PC 41485_AXOPAR_28_SWITCH_PANEL_INSERT_2_PORT

7. 1PC 41505_AXOPAR_28_SWITCH_PANEL_LED_HOLDER_SHORT
39257 - LED-Strip RCOB 12V 3800-4300K 5m/reel - JL-RCOB-480-40K-12V (50mm)
2pcs VMI32036 EXTENSION BOLT M4 L-20
2pcs VMI30913 COUNTERSUNK HEAD SCREW HEX SOCKET M4X8 DIN7991

01.06.2023 / TE (2004468)
23.05.2024 / TE (2005089)
23.09.2024 / HL (2005254 E-SUPPORT CASE)
24.10.2024 / TS (2005259)

Date of modification	Modified by	Description
14.10.2024	PF	C5: 2005259; S313 +200mm, pinbolts
5.1.2024	PF	B3: 2004980; ---
30.4.2024	PF	C4: 2005089; Light pack and MY25 changes

Date	23.5.2024
Drawing by	PF
Sheet rev.	5
Project rev.	C

NAVIX
Copyright by

Axopar Boat		38686 Product code	2004468 Project ID	
28 MK3 Boat model	SWITCH PANEL Title	HL Loc		81/ 106 Sheet

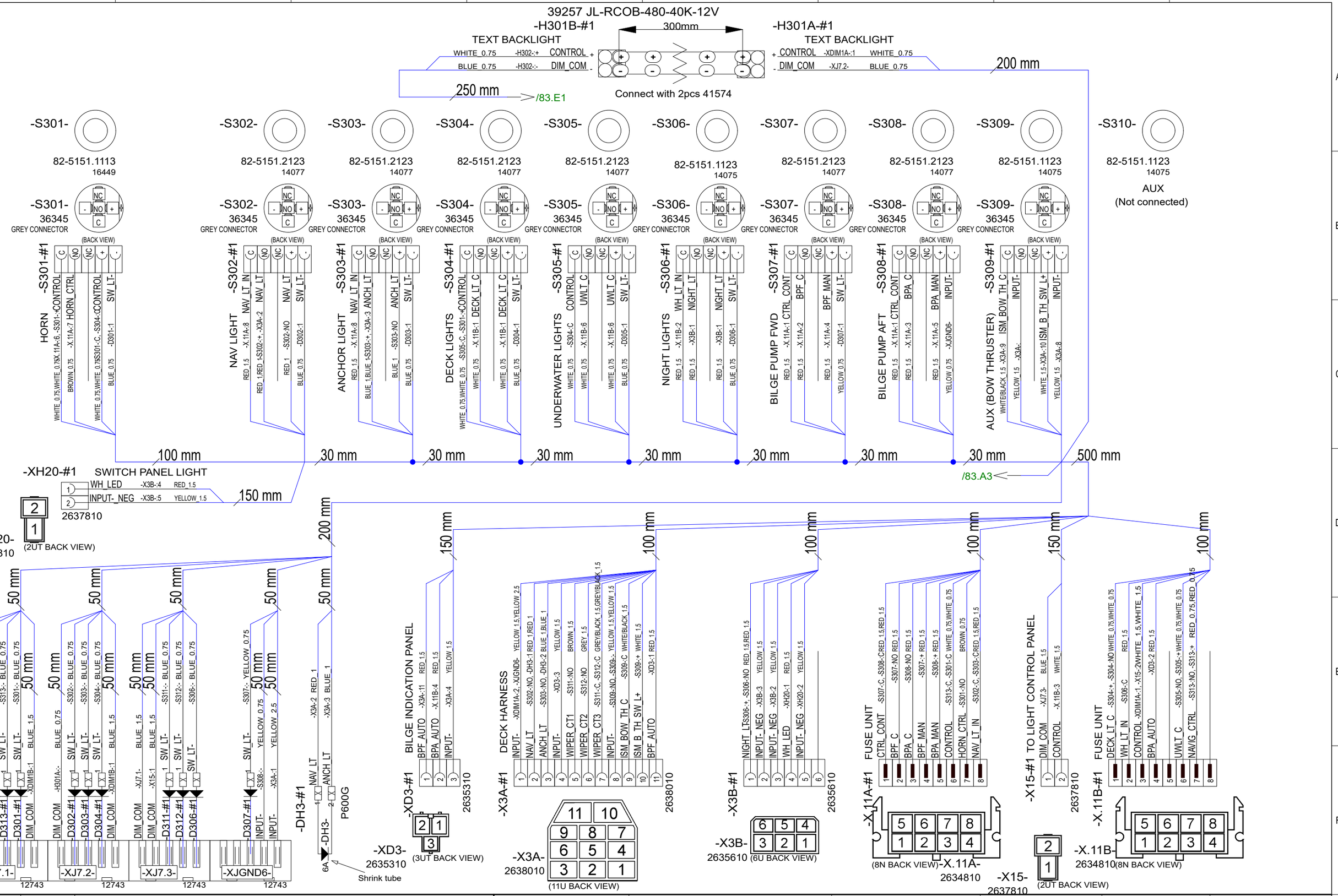

14.10.2024	PF	C5: 2005259; Helm lts->night lts, dimmer remv, S313 +200mm, pinbolts	Date	7.6.2023	Axopar		
5.1.2024	PF	B3: 2004980; ----------	Drawing by	PF	Boat	Sub-product code	39236 Product code	2004468 Project ID
30.4.2024	PF	C4: 2005089; Light pack and MY25 changes	Sheet rev.	5	28 MK3	SWITCH PANEL EXTENDED	HL	82 / 106
Date of modification	Modified by	Description	Project rev.	C	Boat model	Title	Loc	Sheet

NAVIX

Copyright by

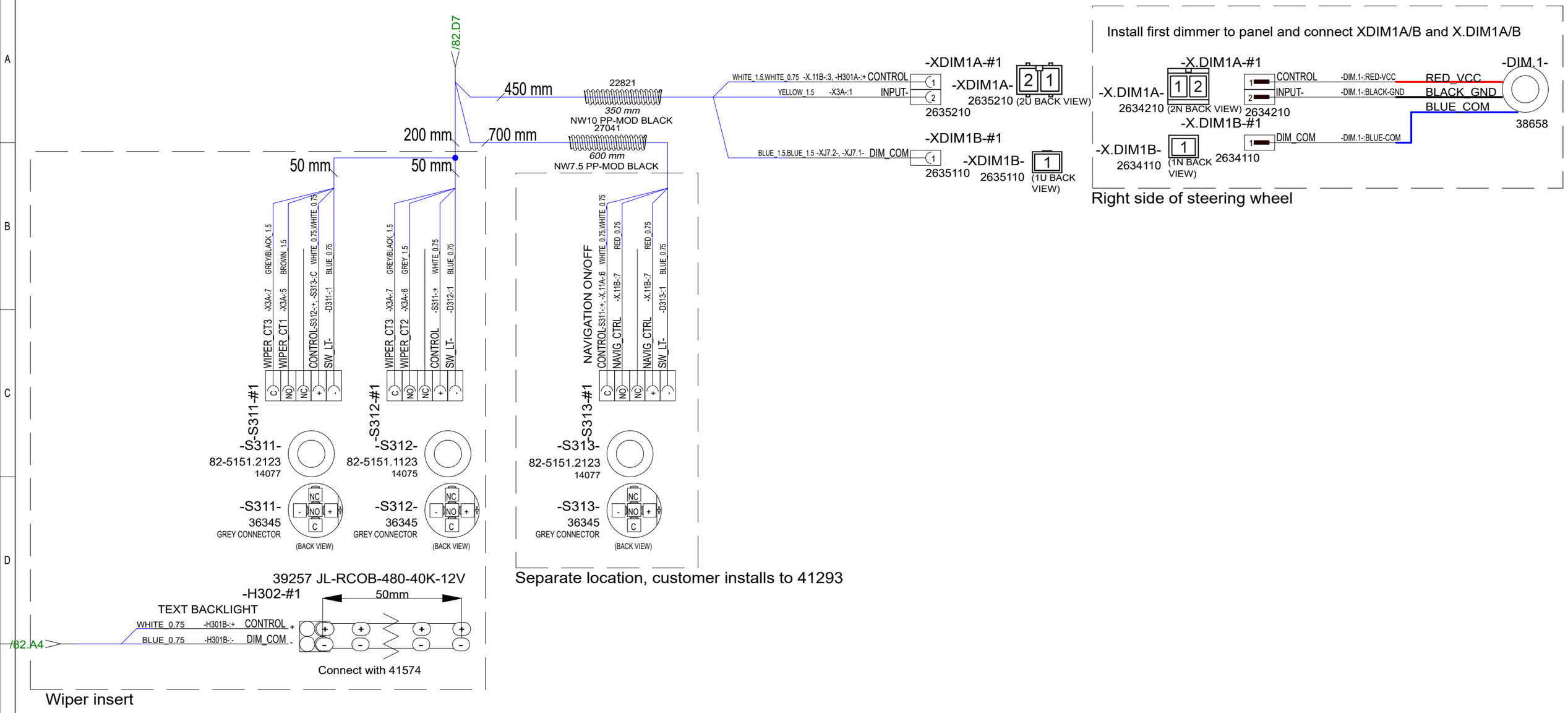

14.10.2024	PF	C5: 2005259; Helm lts->night lts, dimmer remv, S313 +200mm, pinbolts	Date	30.5.2023	NAVIX	Axopar		39236	2004468
5.1.2024	PF	B3: 2004980; ----------	Drawing by	PF		Boat	Sub-product code	Product code	Project ID
30.4.2024	PF	C4: 2005089; Light pack and MY25 changes	Sheet rev.	5		28 MK3	SWITCH PANEL EXTENDED	HL	83 / 106
Date of modification	Modified by	Description	Project rev.	C	Copyright by	Boat model	Title	Loc	Sheet

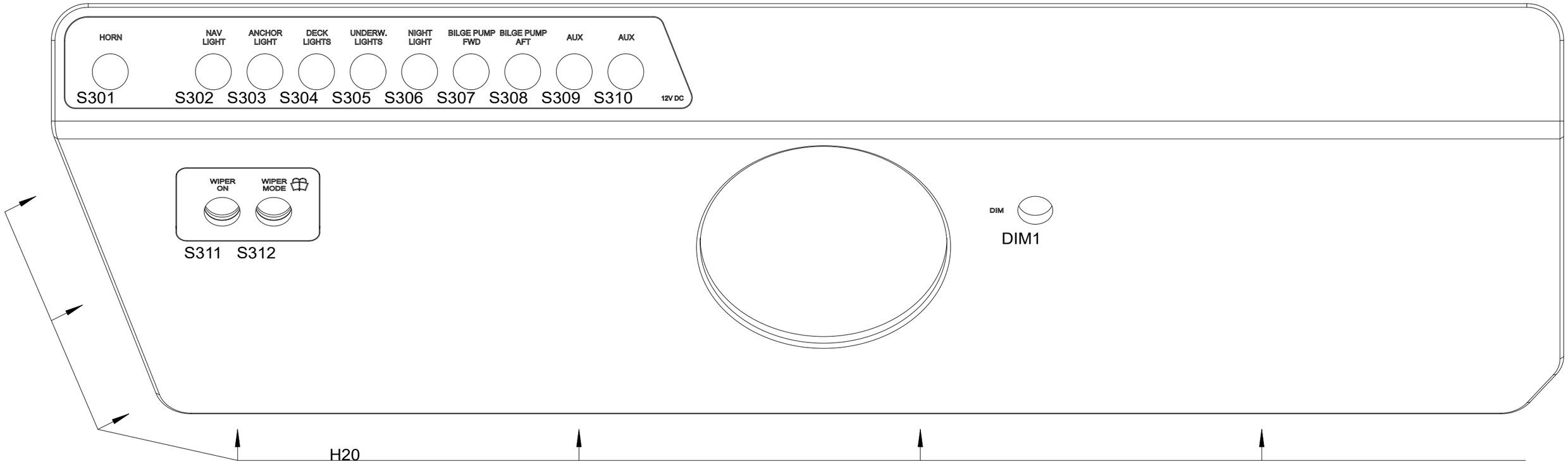

Connect to XH20 after installing to LED place

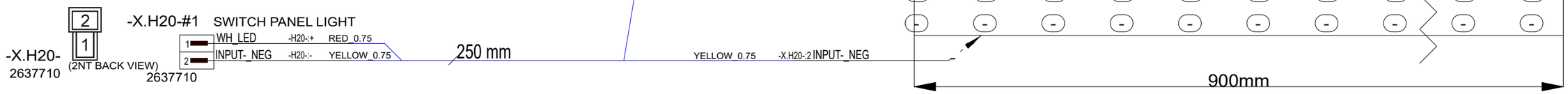

14.10.2024	PF	C5: 2005259; Helm lts->night lts, dimmer remv, S313 +200mm, pinbolts	Date	29.5.2023	NAVIX	Axopar		39236	2004468
5.1.2024	PF	B3: 2004980; ----------	Drawing by	PF		Boat	Sub-product code	Product code	Project ID
30.4.2024	PF	C4: 2005089; Light pack and MY25 changes	Sheet rev.	5		28 MK3	SWITCH PANEL EXTENDED	HL	84 / 106
Date of modification	Modified by	Description	Project rev.	C	Copyright by	Boat model	Title	Loc	Sheet

39236_AXOPAR_28_SWITCH_PANEL_EXTENDED

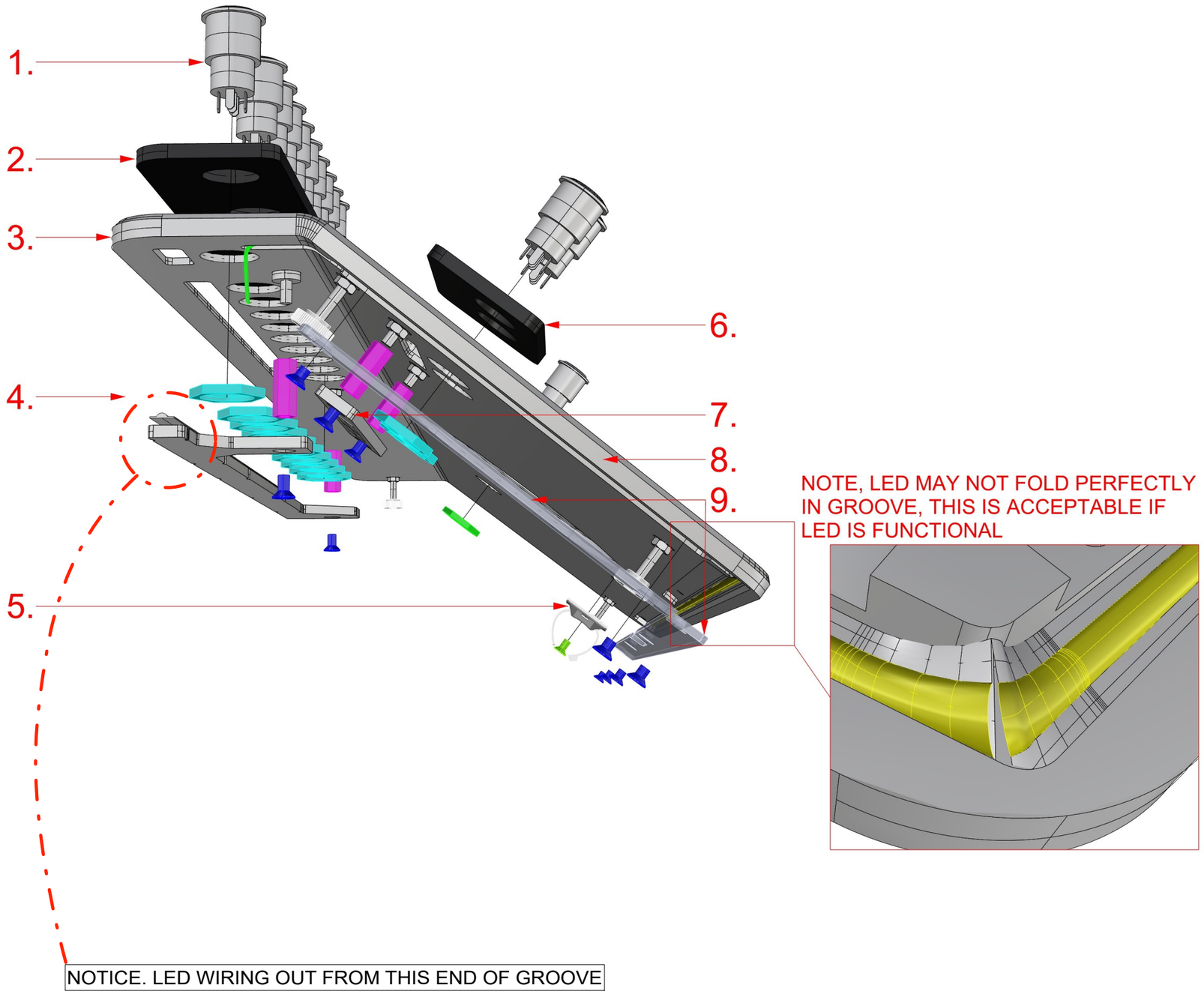

39236_AXOPAR_28_SWITCH_PANEL_EXTENDED

1. 13PCS HALO SWITCH (AS IN DIAGRAM)

2. 1PC
42670_AXOPAR_28_MK3_SWITCH_PANEL_EXT_INSERT_PORT_V1

3. 1PC 39240_AXOPAR_28_SWITCH_PANEL_EXT_BASE_V3

4. 1PC 41504_AXOPAR_28_SWITCH_PANEL_LED_HOLDER_LONG_V2
 39257 - LED-Strip RCOB 12V 3800-4300K 5m/reel - JL-RCOB-480-40K-12V (300mm)
 2pcs VMI32036 EXTENSION BOLT M4 L-20
 2pcs VMI30913 COUNTERSUNK HEAD SCREW HEX SOCKET M4X8 DIN7991

5. 1PC VMI36559 - Self Adhesive Black Cable Tie Mount 5,3mm
 VMI30913 - Countersunk head Screw HEX socket M4X8 DIN7991

6. 1PC 41485_AXOPAR_28_SWITCH_PANEL_INSERT_2_PORT

7. 1PC 41505_AXOPAR_28_SWITCH_PANEL_LED_HOLDER_SHORT
 39257 - LED-Strip RCOB 12V 3800-4300K 5m/reel - JL-RCOB-480-40K-12V (50mm)
 2pcs VMI32036 EXTENSION BOLT M4 L-20
 2pcs VMI30913 COUNTERSUNK HEAD SCREW HEX SOCKET M4X8 DIN7991

8. 1PC LED (AS IN DIAGRAM)

9. 1PC 39241_AXOPAR_28_SWITCH_PANEL_EXT_COVER
 6PCS VMI30912 - Countersunk Screw HEX socket head M4X6 DIN7991
 DO NOT OVER TIGHTEN

01.06.2023 / TE (2004468)
23.05.2024 / TE (2005089)
23.09.2024 / HL (2005254 E-SUPPORT CASE)
24.10.2024 / TS (2005259)

Date of modification	Modified by	Description
14.10.2024	PF	C5: 2005259; Helm lts->night lts, dimmer remv, S313 +200mm, pinbolts
5.1.2024	PF	B3: 2004980; ----------
30.4.2024	PF	C4: 2005089; Light pack and MY25 changes

Date	24.4.2024
Drawing by	PF
Sheet rev.	5
Project rev.	C

NAVIX
Copyright by

Axopar Boat		39236 Product code	2004468 Project ID
28 MK3 Boat model	SWITCH PANEL EXTENDED Title	HL Loc	85 / 106 Sheet

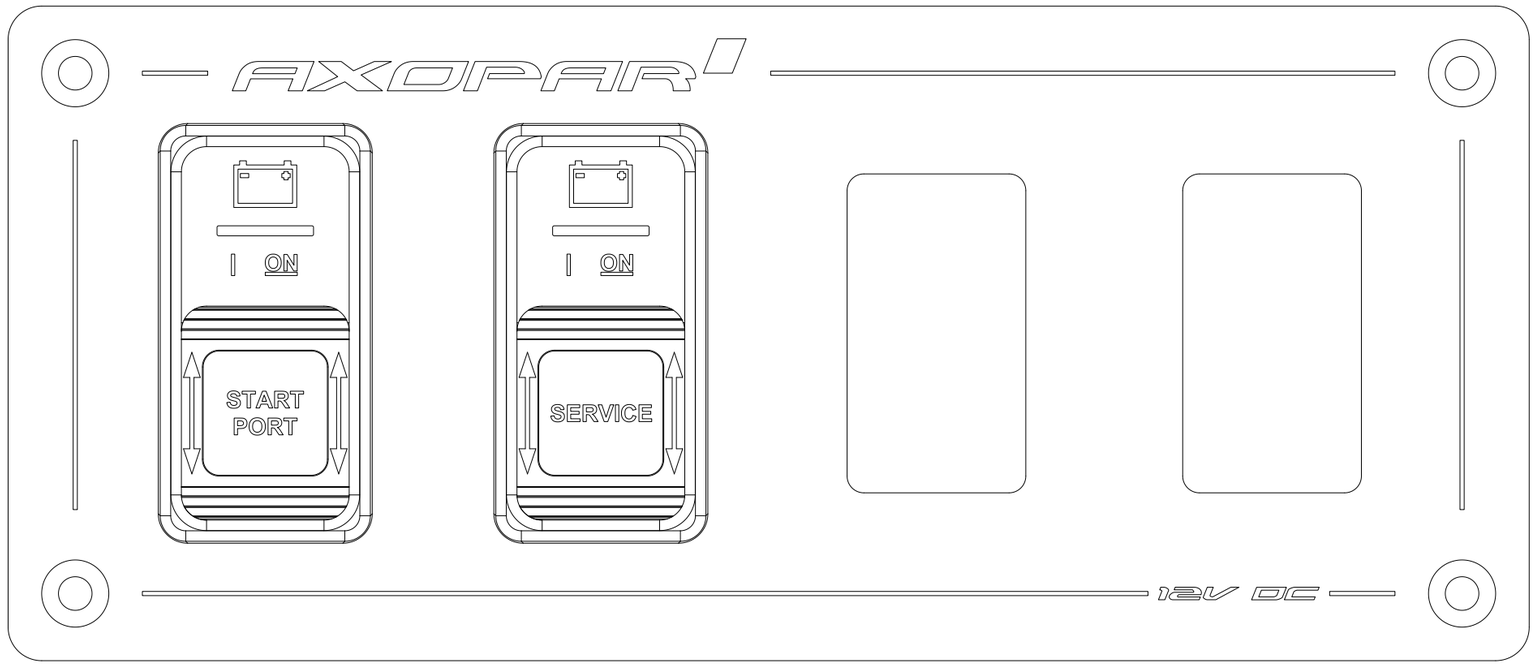

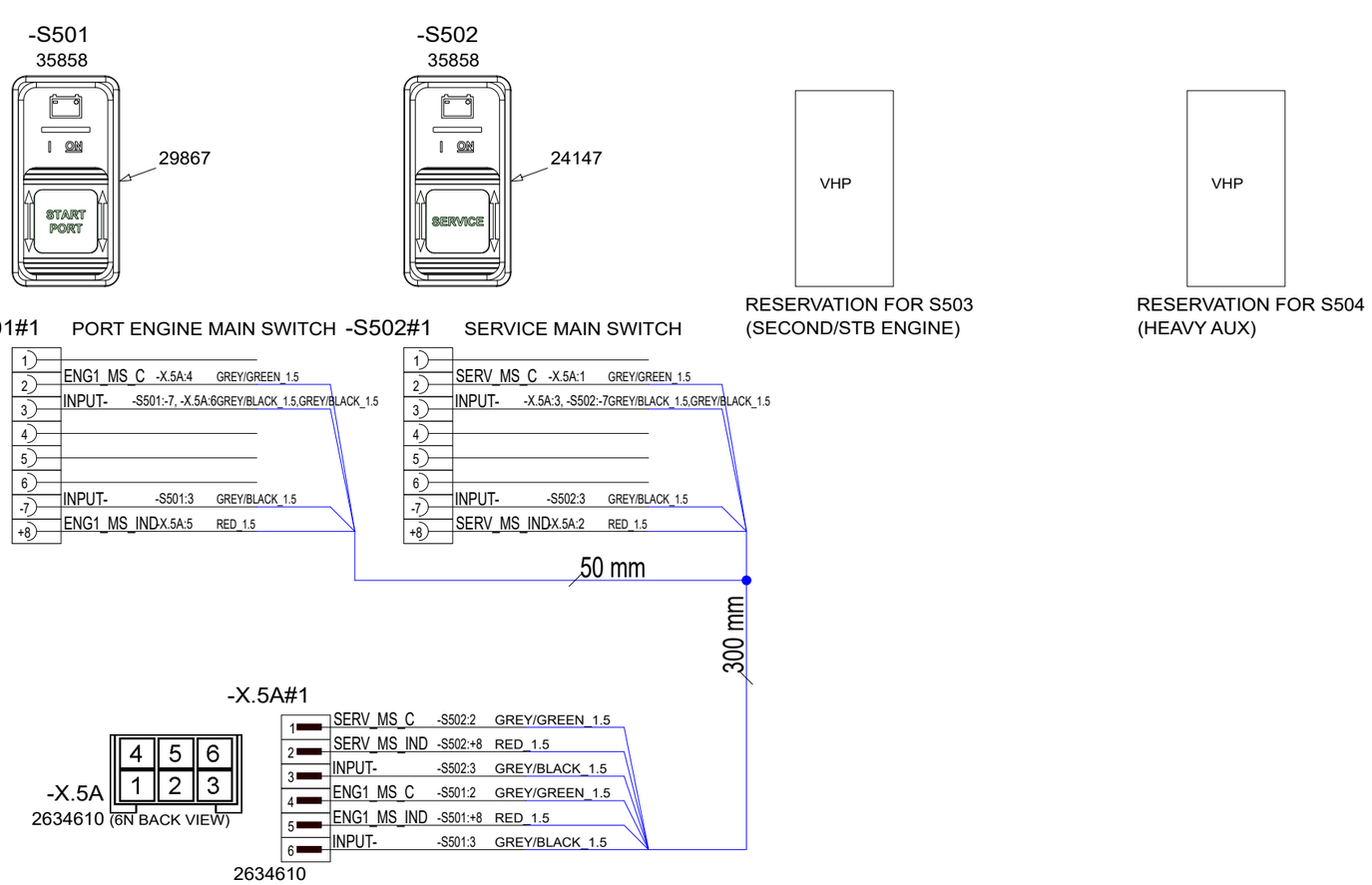

14.5.2024	PF	C1: 2005089; Not modified	Date	27.3.2023	NAVIX	Axopar Boat		38687 Product code	2004468 Project ID
			Drawing by	PF		28 MK3 Boat model	MAIN SWITCH CONTROL PANEL Title	HL	
			Sheet rev.	1				Loc	86 / 106 Sheet
Date of modification	Modified by	Description	Project rev.	C	Copyright by		Sub-product code		

38687_AXOPAR_28_MAIN_SWITCH_CONTROL_PANEL

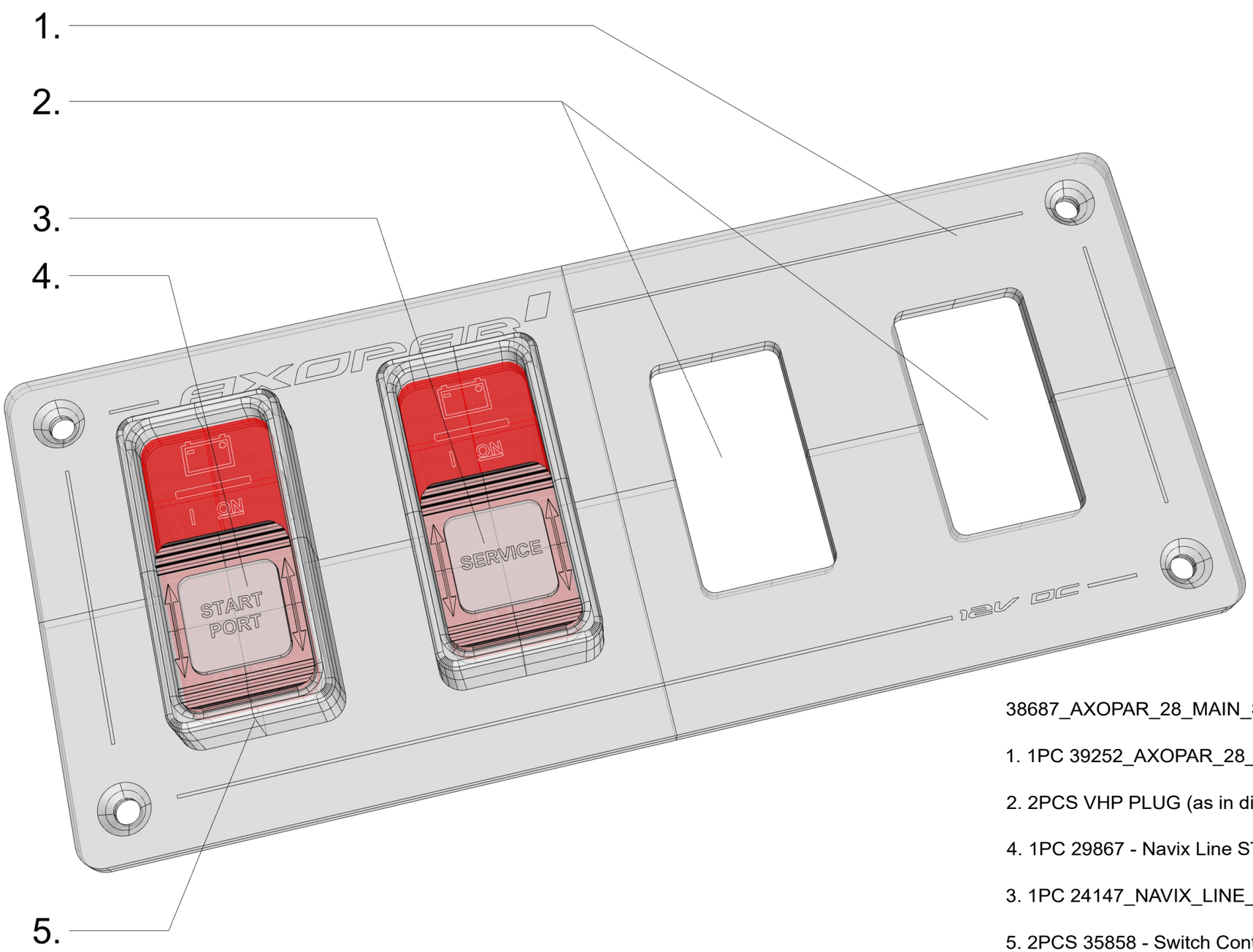

38687_AXOPAR_28_MAIN_SWITCH_CONTROL_PANEL

1. 1PC 39252_AXOPAR_28_MAIN_SW_CONTROL_PANEL_(WOC)

2. 2PCS VHP PLUG (as in diagram)

4. 1PC 29867 - Navix Line START PORT LABEL FOR 16756 SPDT -

3. 1PC 24147_NAVIX_LINE_SERVICE_LABEL_FOR_16756_SPDT

5. 2PCS 35858 - Switch Contura SPDT -ON-ON - Blue Sea 2155B-BSS (as in diagram)

01.06.-23 / TE (2004468)

14.5.2024	PF	C1: 2005089; Not modified	Date	8.5.2023	NAVIX	Axopar Boat		38687 Product code	2004468 Project ID
			Drawing by	PF		28 MK3 Boat model	MAIN SWITCH CONTROL PANEL Title	HL Loc	87 / 106 Sheet
			Sheet rev.	1					
Date of modification	Modified by	Description	Project rev.	C	Copyright by				

PLACEMENT OF ELECTRICAL COMPONENTS

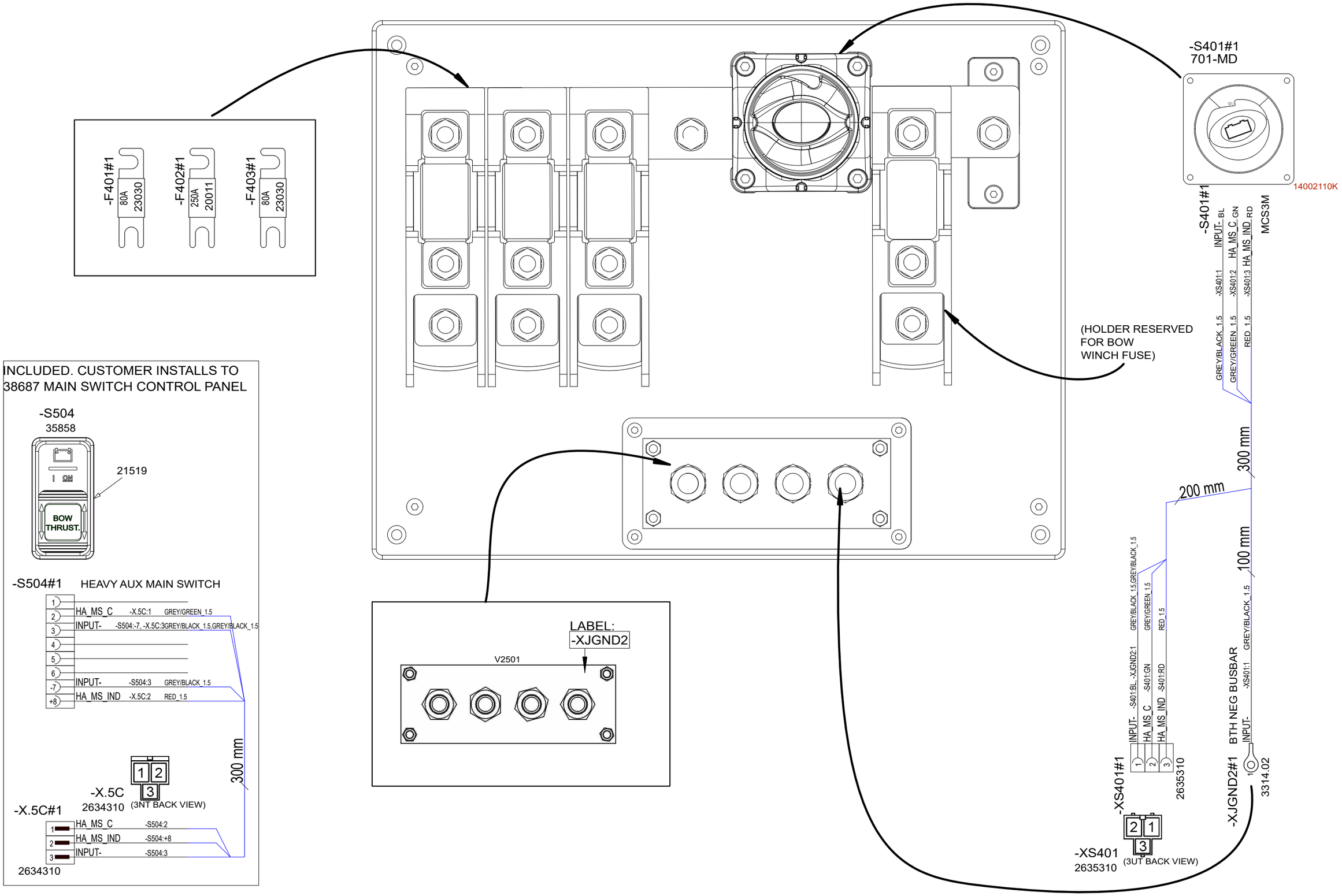

9.8.2024	PF	C3: 2005089; Wire lenght changes	Date	8.5.2023	NAVIX	Axopar		38688	2004468
		B2: Not modified	Drawing by	PF		Boat	Sub-product code	Product code	Project ID
30.4.2024	PF	C2: 2005089; Not modified	Sheet rev.	3		28 MK3	BOW THRUSTER UNIT	HL	88 / 106
Date of modification	Modified by	Description	Project rev.	C	Copyright by	Boat model	Title	Loc	Sheet

PANEL ASSEMBLY

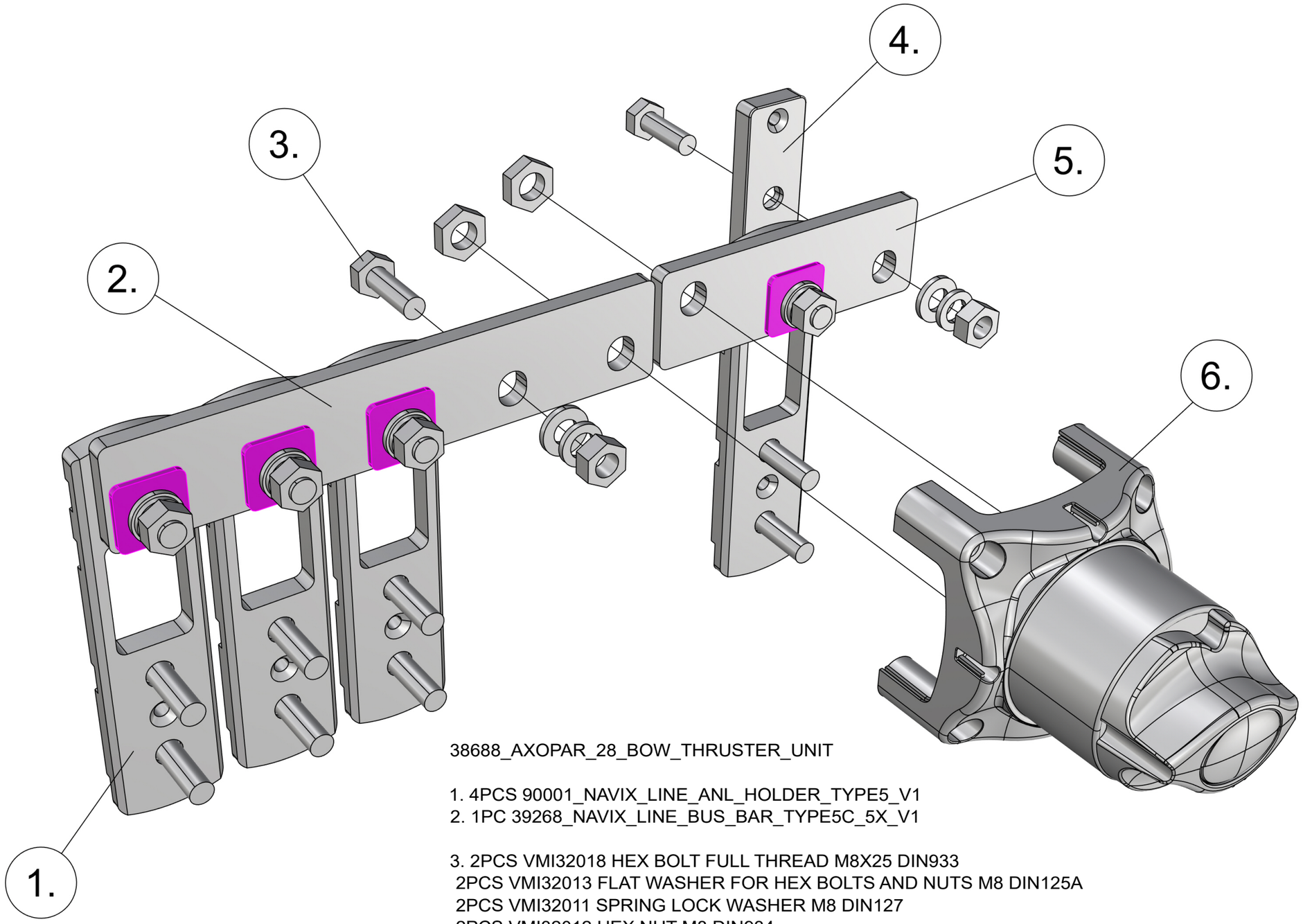

38688_AXOPAR_28_BOW_THRUSTER_UNIT

1. 4PCS 90001_NAVIX_LINE_ANL_HOLDER_TYPE5_V1
2. 1PC 39268_NAVIX_LINE_BUS_BAR_TYPE5C_5X_V1

3. 2PCS VMI32018 HEX BOLT FULL THREAD M8X25 DIN933
 2PCS VMI32013 FLAT WASHER FOR HEX BOLTS AND NUTS M8 DIN125A
 2PCS VMI32011 SPRING LOCK WASHER M8 DIN127
 2PCS VMI32012 HEX NUT M8 DIN934

4. 1PC 39048_NAVIX_LINE_BOLT_BASE_1X
5. 1PC 39269_NAVIX_LINE_BUS_BAR_TYPE5_BEP_RIGHT_2X_V1
6. - (AS IN DIAGRAM)

9.8.2024	PF	C3: 2005089; Wire lenght changes	Date 1.6.2023	NAVIX	Axopar			
		B2: Not modified	Drawing by PF		Boat	Sub-product code	38688 Product code	2004468 Project ID
30.4.2024	PF	C2: 2005089; Not modified	Sheet rev. 3		28 MK3	BOW THRUSTER UNIT	HL	89 / 106
Date of modification	Modified by	Description	Project rev. C	Copyright by	Boat model	Title	Loc	Sheet

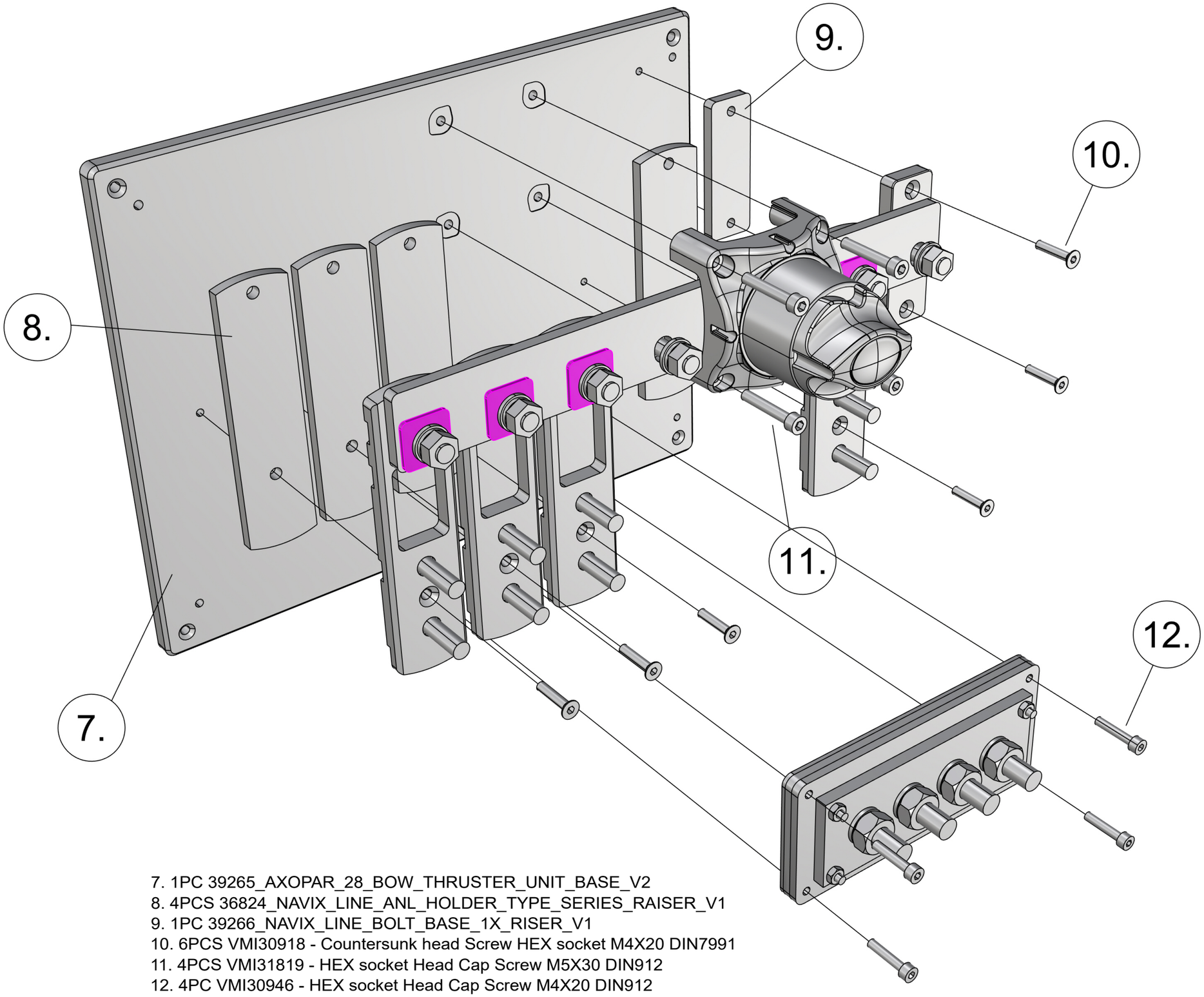

7. 1PC 39265_AXOPAR_28_BOW_THRUSTER_UNIT_BASE_V2
8. 4PCS 36824_NAVIX_LINE_ANL_HOLDER_TYPE_SERIES_RAISER_V1
9. 1PC 39266_NAVIX_LINE_BOLT_BASE_1X_RISER_V1
10. 6PCS VMI30918 - Countersunk head Screw HEX socket M4X20 DIN7991
11. 4PCS VMI31819 - HEX socket Head Cap Screw M5X30 DIN912
12. 4PC VMI30946 - HEX socket Head Cap Screw M4X20 DIN912

9.8.2024	PF	C3: 2005089; Wire lenght changes	Date 1.6.2023	NAVIX	Axopar			
		B2: Not modified	Drawing by PF		Boat	Sub-product code	38688 Product code	2004468 Project ID
30.4.2024	PF	C2: 2005089; Not modified	Sheet rev. 3		28 MK3	BOW THRUSTER UNIT	HL	90 / 106
Date of modification	Modified by	Description	Project rev. C	Copyright by	Boat model	Title	Loc	Sheet

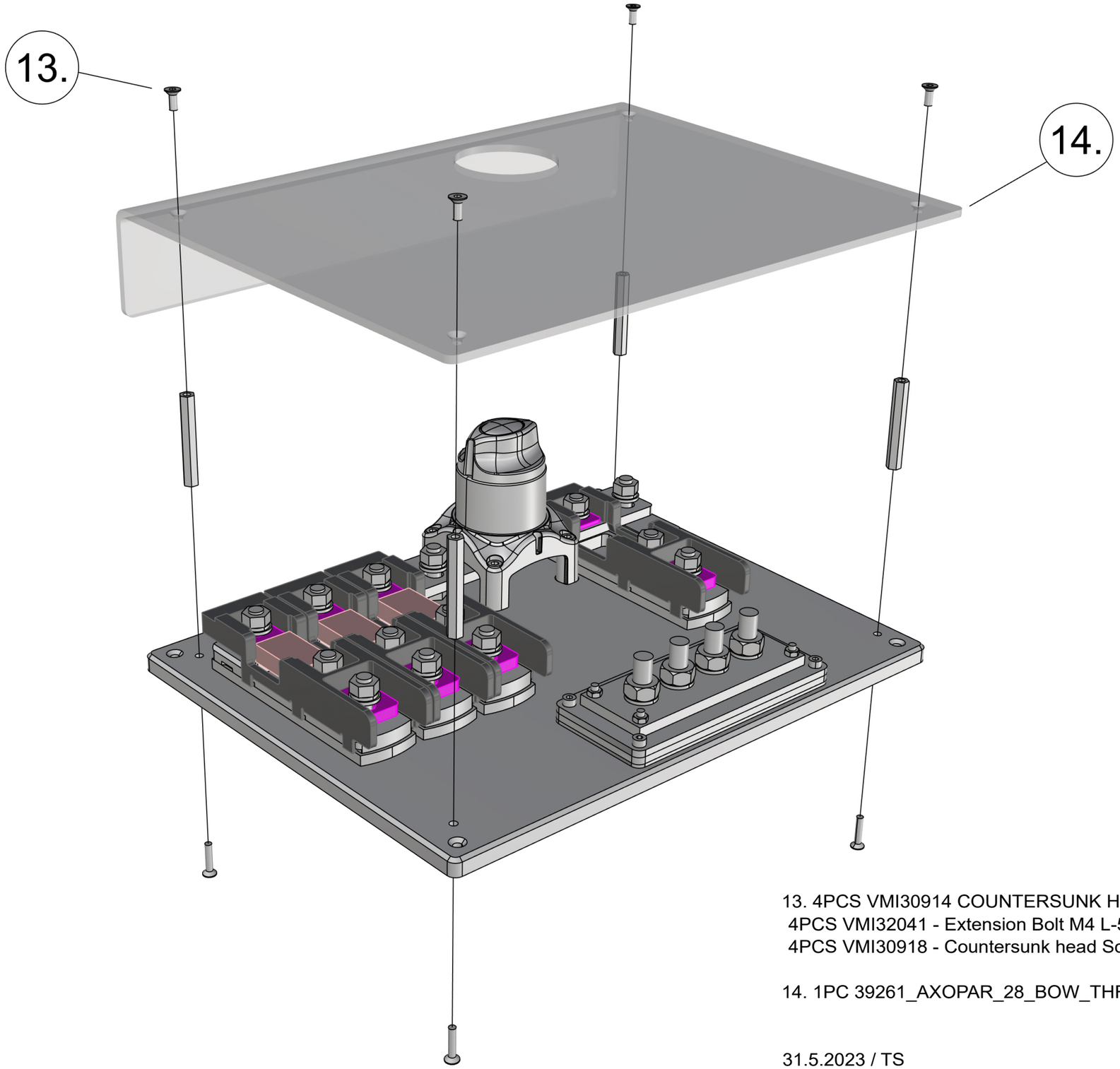

13. 4PCS VMI30914 COUNTERSUNK HEAD SCREW HEX SOCKET M4X10 DIN7991
4PCS VMI32041 - Extension Bolt M4 L-50
4PCS VMI30918 - Countersunk head Screw HEX socket M4X20 DIN7991

14. 1PC 39261_AXOPAR_28_BOW_THRUSTER_UNIT_COVER_V2

31.5.2023 / TS
19.10.2023 / TS (2004800)

Date of modification	Modified by	Description
9.8.2024	PF	C3: 2005089; Wire lenght changes
		B2: Not modified
30.4.2024	PF	C2: 2005089; Not modified

Date	1.6.2023
Drawing by	PF
Sheet rev.	3
Project rev.	C

NAVIX
Copyright by

Axopar Boat	Sub-product code	38688 Product code	2004468 Project ID
28 MK3 Boat model	BOW THRUSTER UNIT Title	HL Loc	91/ 106 Sheet

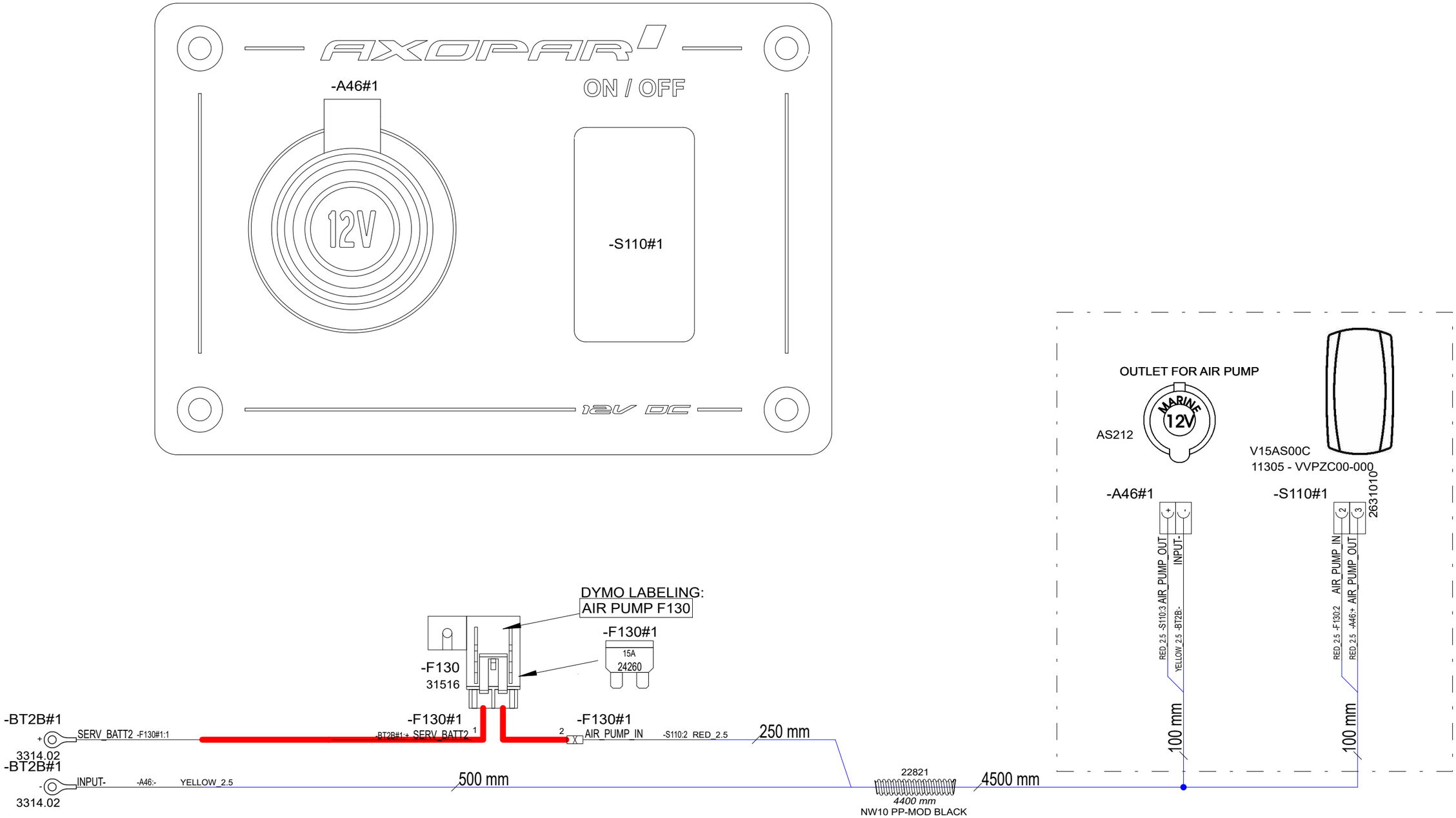

9.8.2024	PF	C3: 2005089; Length +1500mm	Date	15.12.2023	NAVIX	Axopar	40527	40505	2004468
		B1: Not modified	Drawing by	PF		Boat	Sub-product code	Product code	Project ID
30.4.2024	PF	C2: 2005089; Fuse wiring modified	Sheet rev.	3		28 MK3	12V OUTLET AIRCOMP PANEL	HL	92 / 106
Date of modification	Modified by	Description	Project rev.	C	Copyright by	Boat model	Title	Loc	Sheet

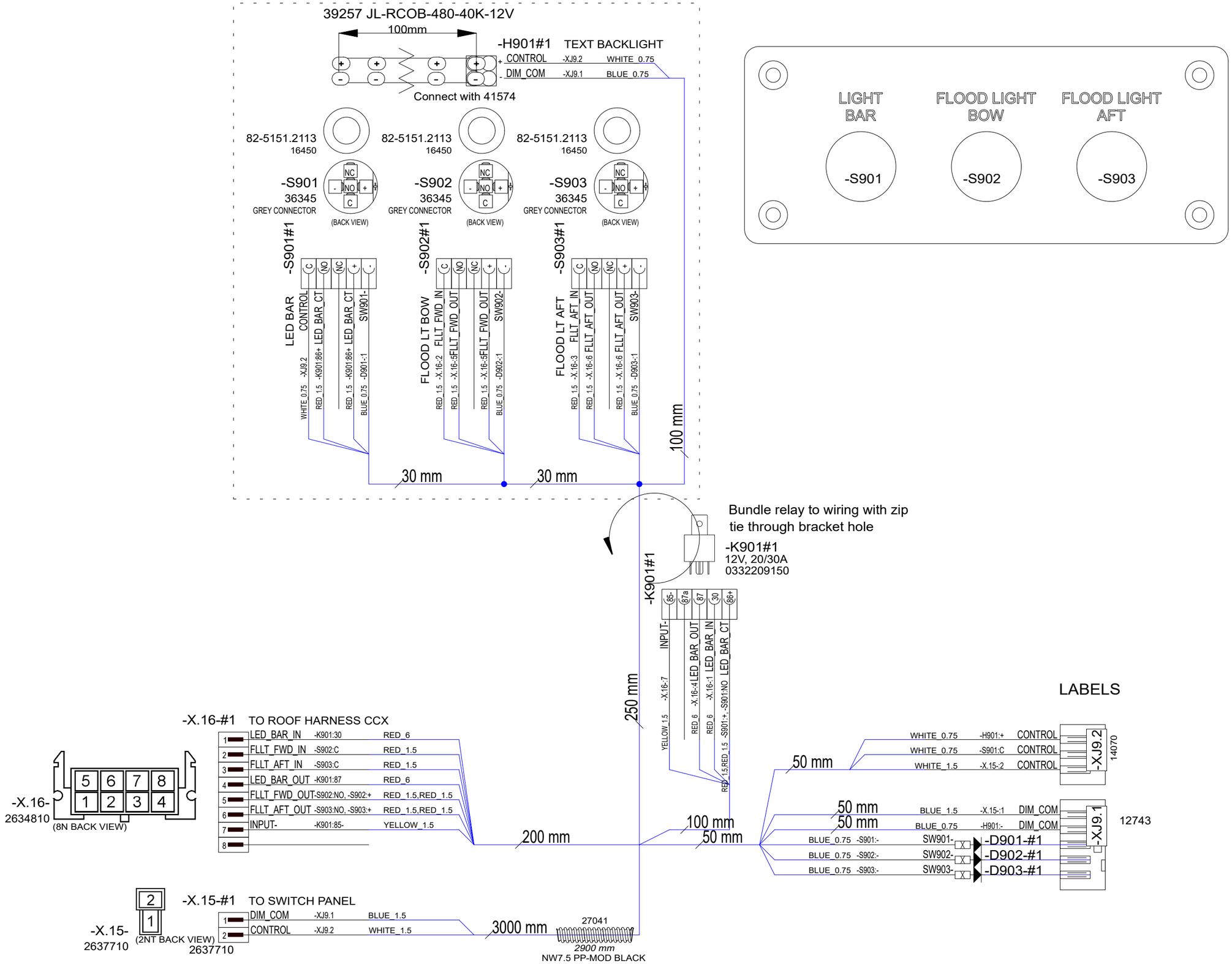

6.5.2024	PF	C1: 2005089; New product	Date	30.4.2024	NAVIX	Axopar		41388	2004468
			Drawing by	PF		Boat	Sub-product code	Product code	Project ID
			Sheet rev.	1		28 MK3	CCX LIGHT CONTROL PANEL	HL	93 / 106
Date of modification	Modified by	Description	Project rev.	C	Copyright by	Boat model	Title	Loc	Sheet

41388_AXOPAR_28_MK3_LIGHT_CONTROL_PANEL

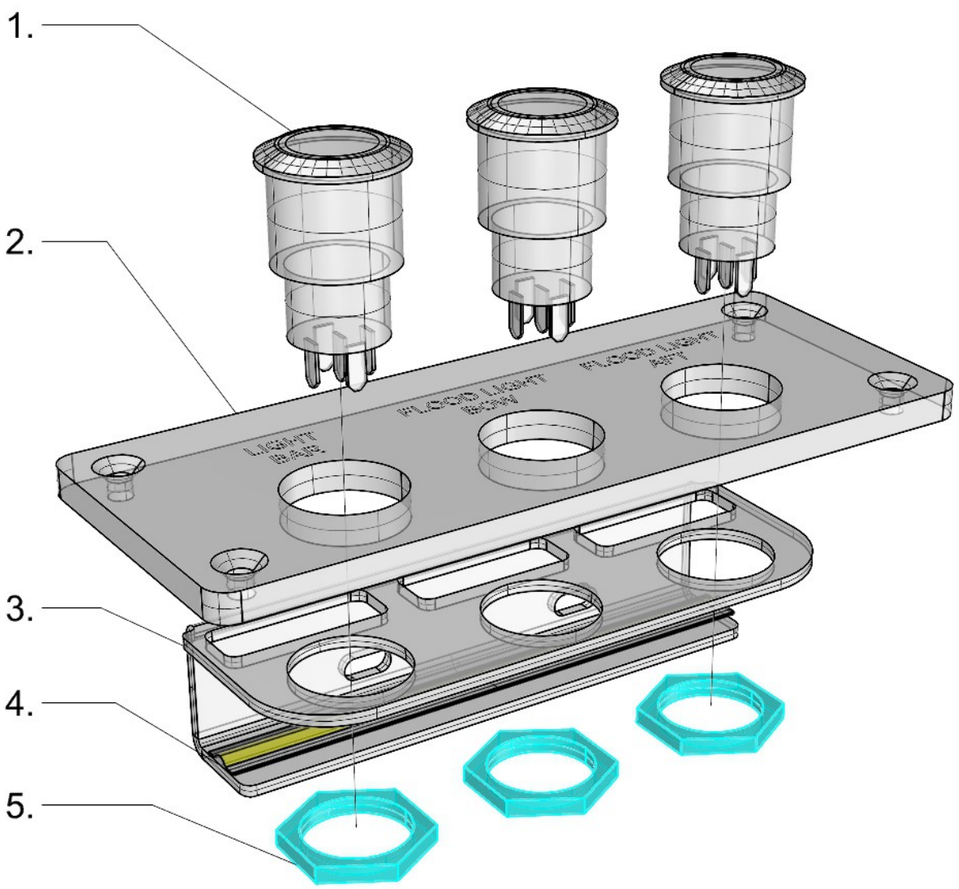

41388_AXOPAR_28_MK3_LIGHT_CONTROL_PANEL

1. 3PCS HALO SWITCH (AS IN DIAGRAM)

2. 1PC 41595_AXOPAR_28_MK3_LIGHT_CONTROL_PANEL_(WOC)

3. 1PC 41596_AXOPAR_28_MK3_LIGHT_CONTROL_PANEL_LED_BRACKET

4. 1PC 39257 - LED-Strip RCOB 12V 3800-4300K 5m/reel - JL-RCOB-480-40K-12V (100mm)

5. 3PCS HALO SWITCH NUT

23.05.2024 / TE (2005089)

Date of modification	Modified by	Description
6.5.2024	PF	C1: 2005089; New product

Date	23.5.2024
Drawing by	PF
Sheet rev.	1
Project rev.	C

NAVIX

Copyright by

Axopar Boat		41388 Product code	2004468 Project ID
28 MK3 Boat model	CCX LIGHT CONTROL PANEL Title	HL Loc	94 / 106 Sheet

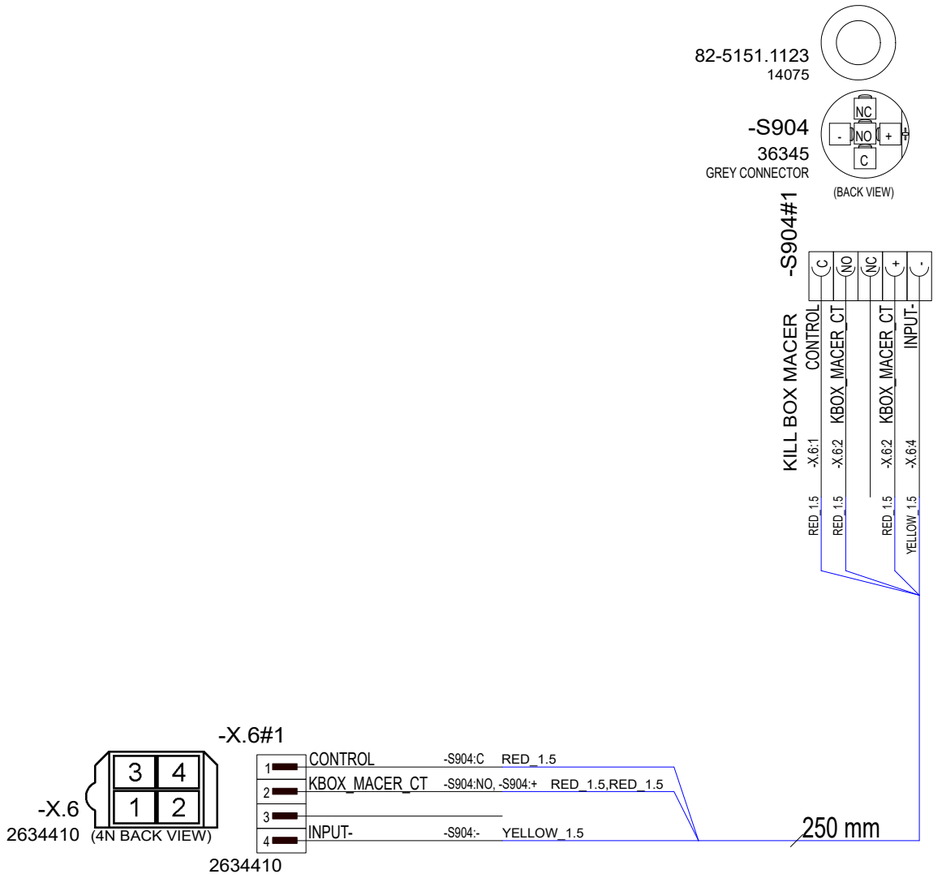

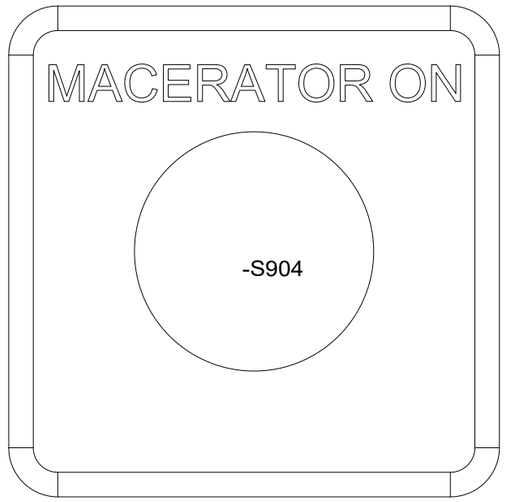

6.5.2024	PF	C1: 2005089; New product	Date	6.5.2024	NAVIX	Axopar	41584	41386	2004468
			Drawing by	PF		Boat	Sub-product code	Product code	Project ID
			Sheet rev.	1		28 MK3	CCX MACERATOR PANEL	HL	95 / 106
Date of modification	Modified by	Description	Project rev.	C	Copyright by	Boat model	Title	Loc	Sheet

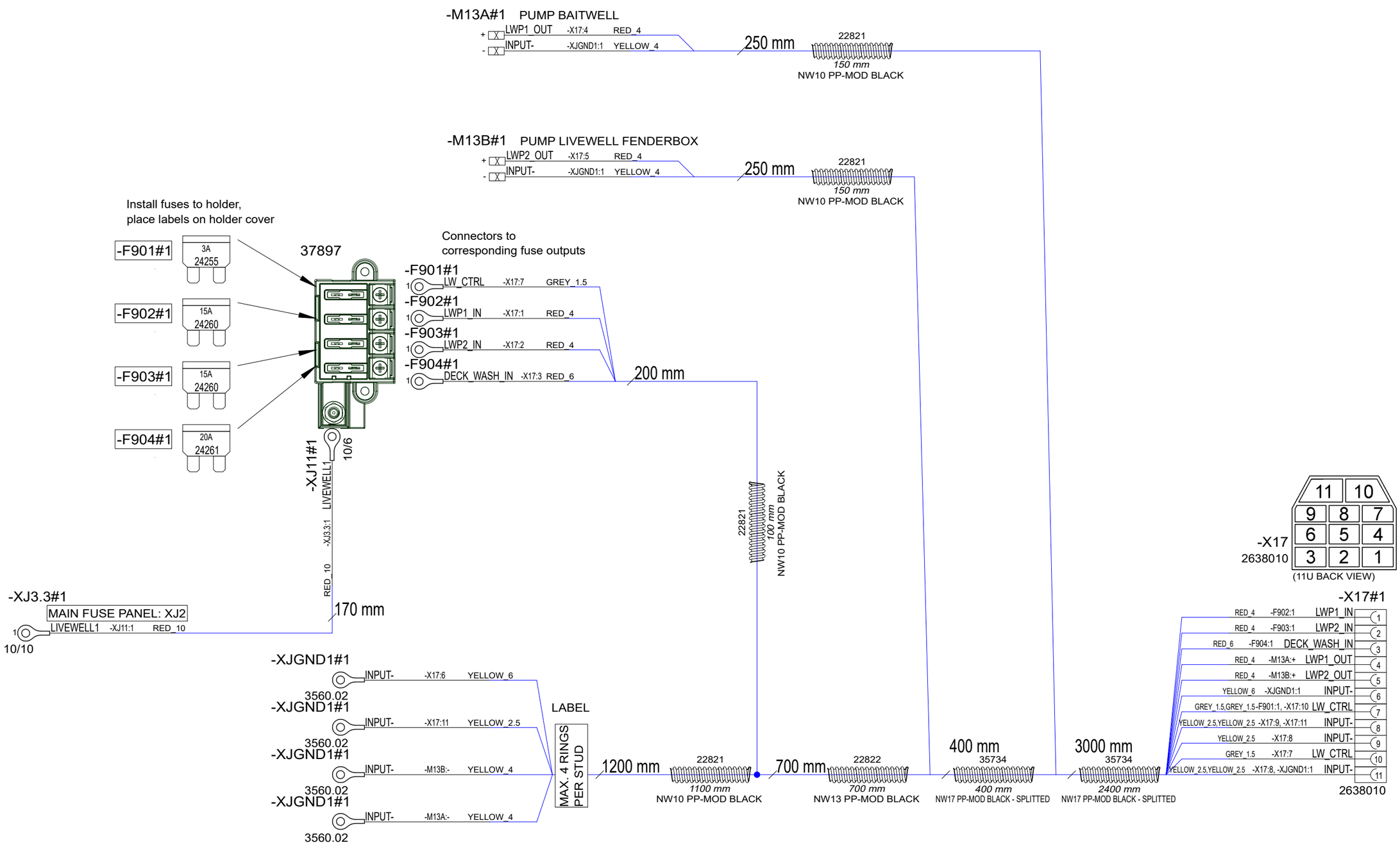

Date of modification	Modified by	Description
6.5.2024	PF	C1: 2005089; New product
14.10.2024	PF	C2: 2005259; X18 added, relay type, M13C->M15 dwash, sw order, lengths

Date	6.5.2024
Drawing by	PF
Sheet rev.	2
Project rev.	C

NAVIX
Copyright by

Axopar Boat		41387 Product code	2004468 Project ID
28 MK3 Boat model	CCX LIVEWELL CONTROL PANEL Title	HL Loc	96 / 106 Sheet

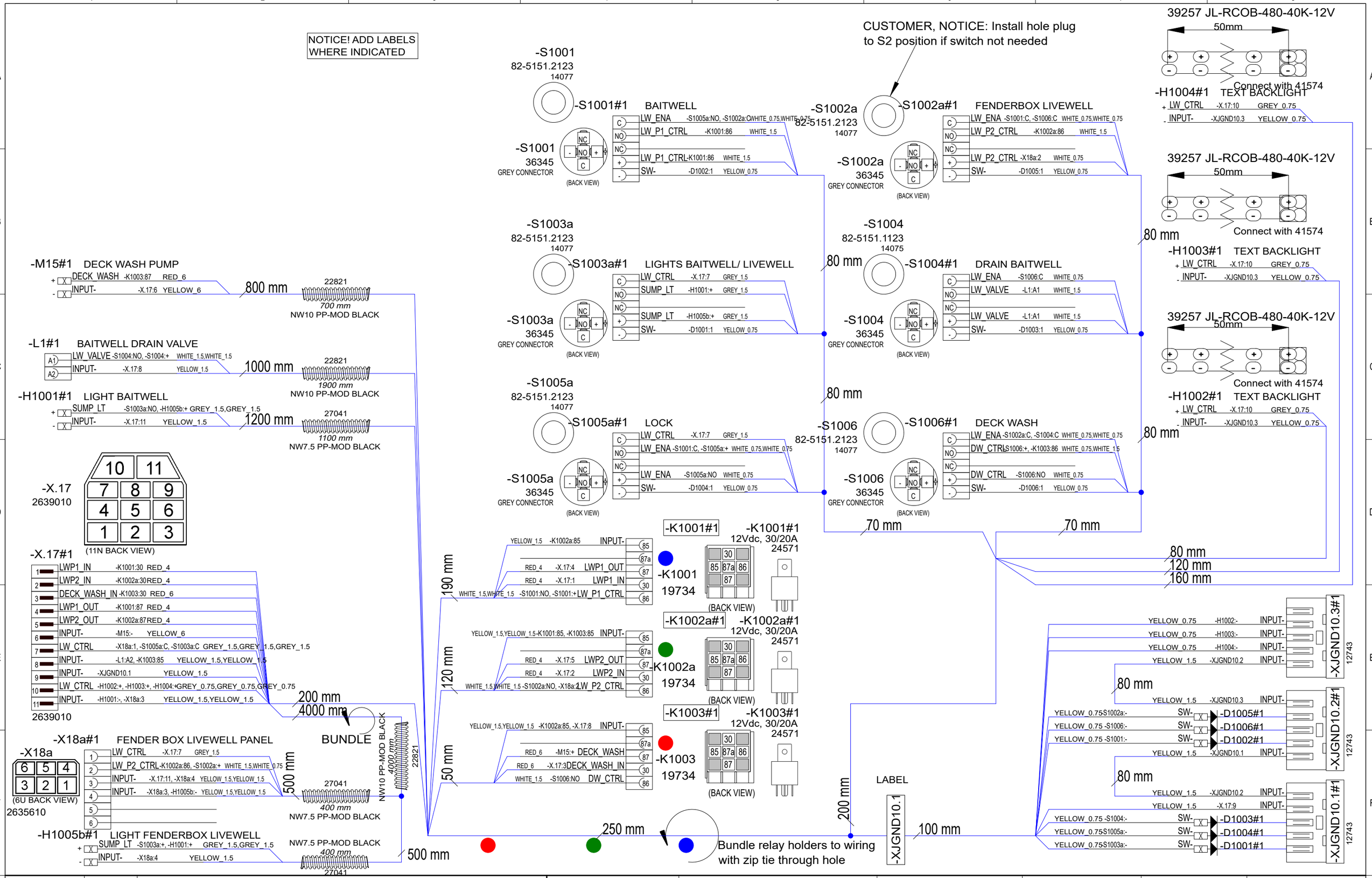

Date of modification	Modified by	Description
6.5.2024	PF	C1: 2005089; New product
14.10.2024	PF	C2: 2005259; X18 added, relay type, M13C->M15 dwash, sw order, lengths

Date	6.5.2024
Drawing by	PF
Sheet rev.	2
Project rev.	C

NAVIX
Copyright by

Axopar Boat	Sub-product code	41387 Product code	2004468 Project ID
28 MK3 Boat model	CCX LIVEWELL CONTROL PANEL Title	HL Loc	97 / 106 Sheet

41387_AXOPAR_28_MK3_LIVEWELL_CONTROL_PANEL

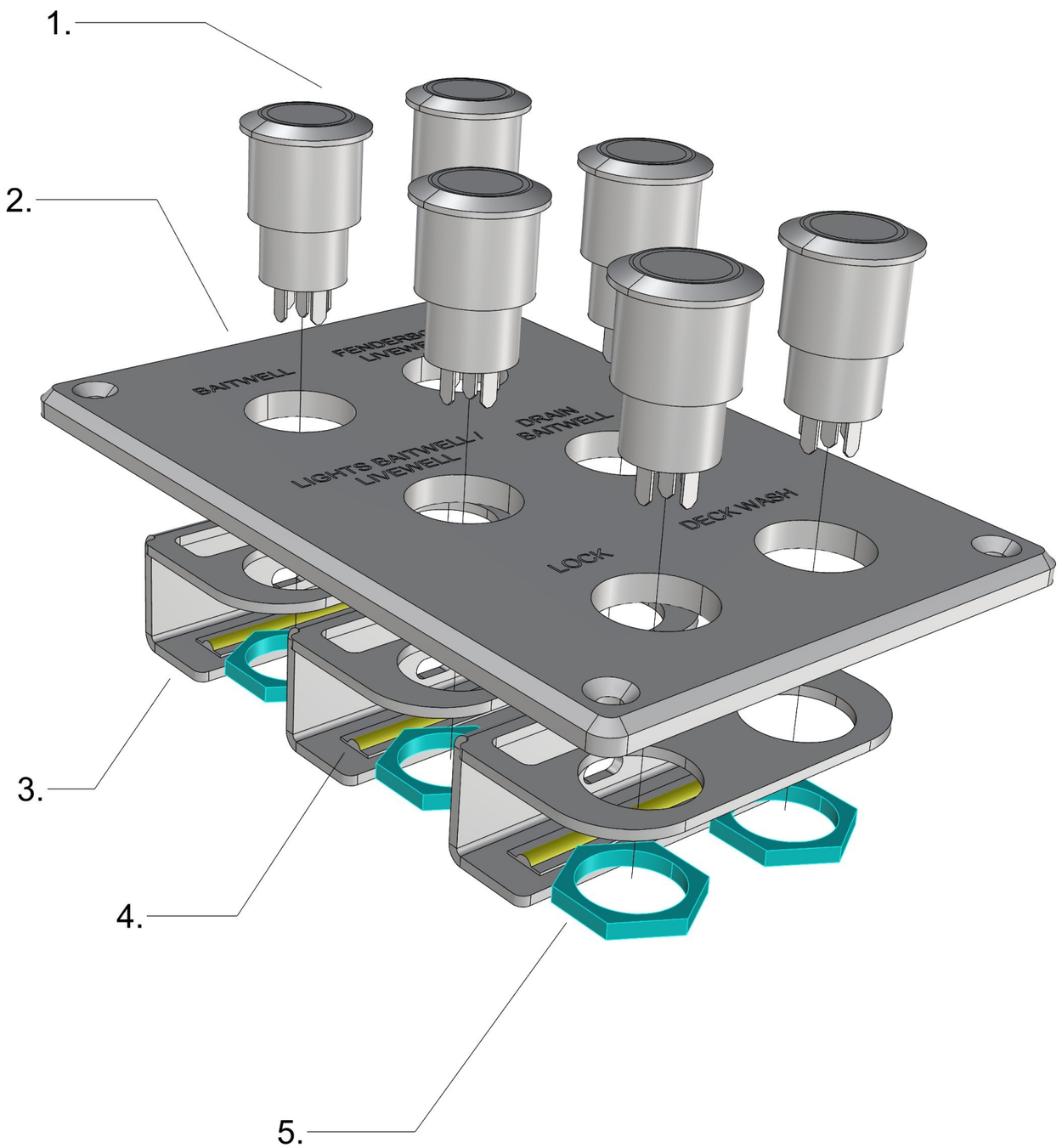

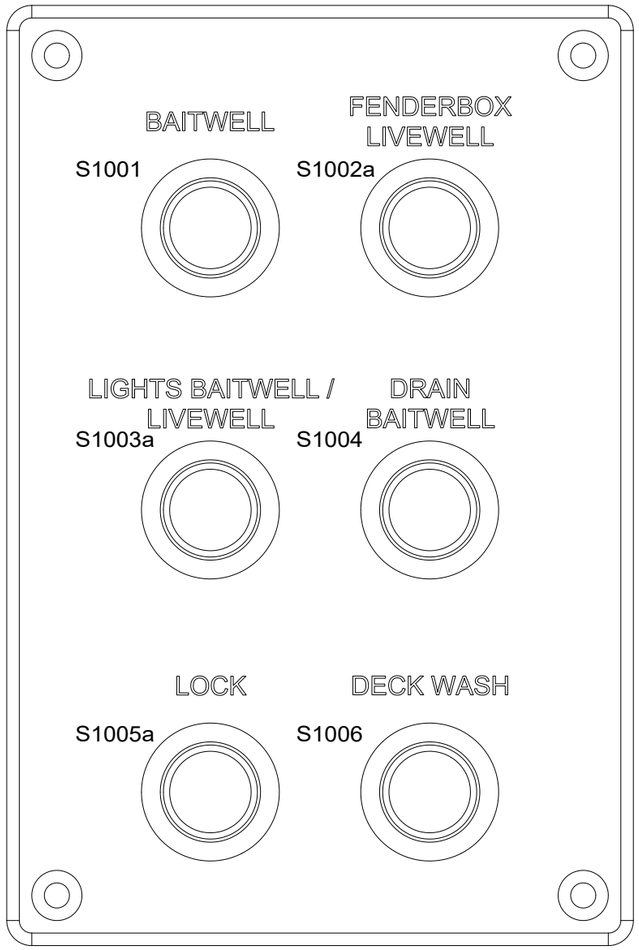

41387_AXOPAR_28_MK3_LIVEWELL_CONTROL_PANEL

1. 6PCS HALO SWITCH (AS IN DIAGRAM)

2. 1PC 41597_AXOPAR_28_MK3_LIVEWELL_CONTROL_PANEL_(WOC)_V2

3. 3PCS 41598_AXOPAR_28_MK3_LIVEWELL_CONTROL_PANEL_LED_BRACKET_V1

4. 3PCS 39257 - LED-Strip RCOB 12V 3800-4300K 5m/reel - JL-RCOB-480-40K-12V (50mm)

5. 6PCS HALO SWITCH NUT

1PC INCLUDE IN SHIPMENT!
35534 - Hole Plug, Ø19,1 mm

23.05.2024 / TE (2005089)
24.10.2024 / TS (2005259)

Date of modification	Modified by	Description
6.5.2024	PF	C1: 2005089; New product
14.10.2024	PF	C2: 2005259; X18 added, relay type, M13C->M15 dwash, sw order, lengths

Date	30.5.2024
Drawing by	PF
Sheet rev.	2
Project rev.	C

NAVIX
Copyright by

Axopar Boat		41387 Product code	2004468 Project ID
28 MK3 Boat model	CCX LIVEWELL CONTROL PANEL Title	HL Loc	98 / 106 Sheet

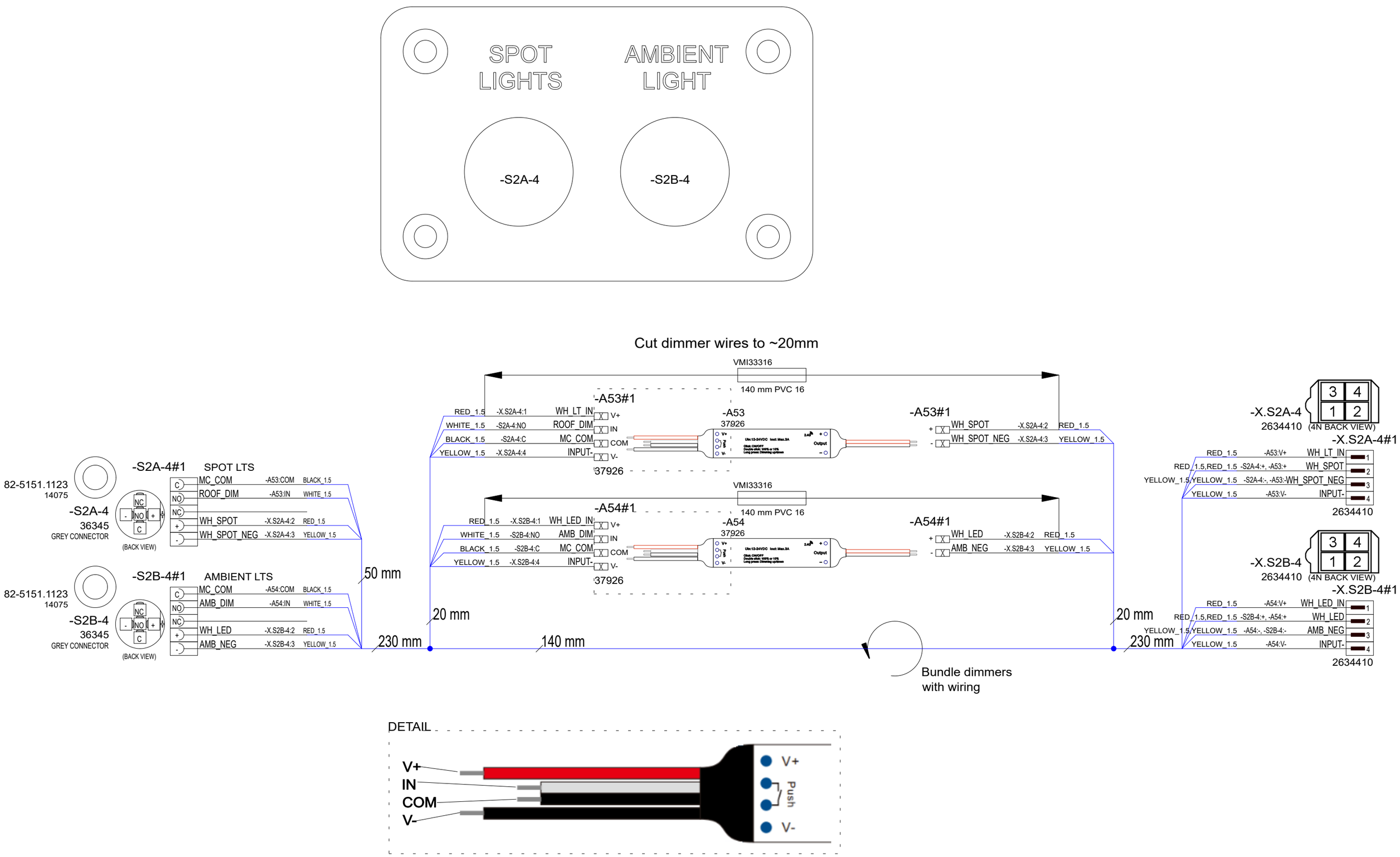

14.5.2024	PF	C1: 2005089; New product	Date	10.5.2024	NAVIX	Axopar	41488	41486	2004468
			Drawing by	PF		Boat	Sub-product code	Product code	Project ID
			Sheet rev.	1		28 MK3	LIGHT SWITCH MAIN CABIN OPEN LP	HL	99 / 106
Date of modification	Modified by	Description	Project rev.	C	Copyright by	Boat model	Title	Loc	Sheet

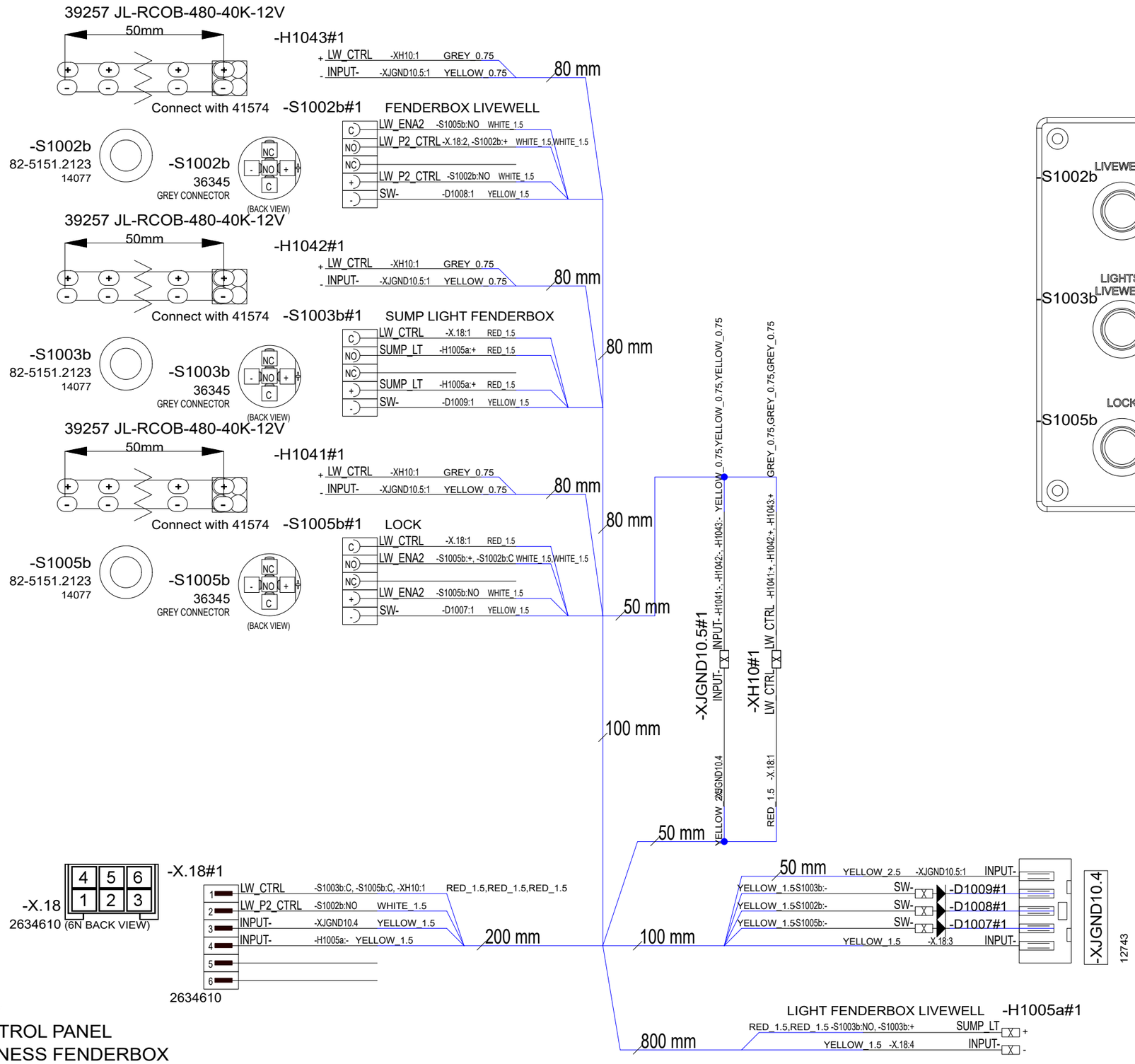

Customer note: Connect to either one of below
41387 - Axopar 28 MK3 CCX LIVEWELL CONTROL PANEL
42475 - Axopar 28 MK3 CCX LIVEWELL HARNESS FENDERBOX
If connected to 41387, remove S1002 and leave as dummy or cover with hole plug.

14.10.2024	PF	C1: 2005259; New drawing	Date	11.10.2024	Axopar		
			Drawing by	PF	Boat	Sub-product code: 42474	Product code: 2004468 Project ID
			Sheet rev.	1	28 MK3	CCX LIVEWELL CONTROL PANEL FENDERBOX	HL
Date of modification	Modified by	Description	Project rev.	C	Boat model	Title	Loc / Sheet: 100 / 106

NAVIX
Copyright by

42474_AXOPAR_28_MK3_CCX_LIVEWELL_ CONTROL_PANEL_FENDERBOX

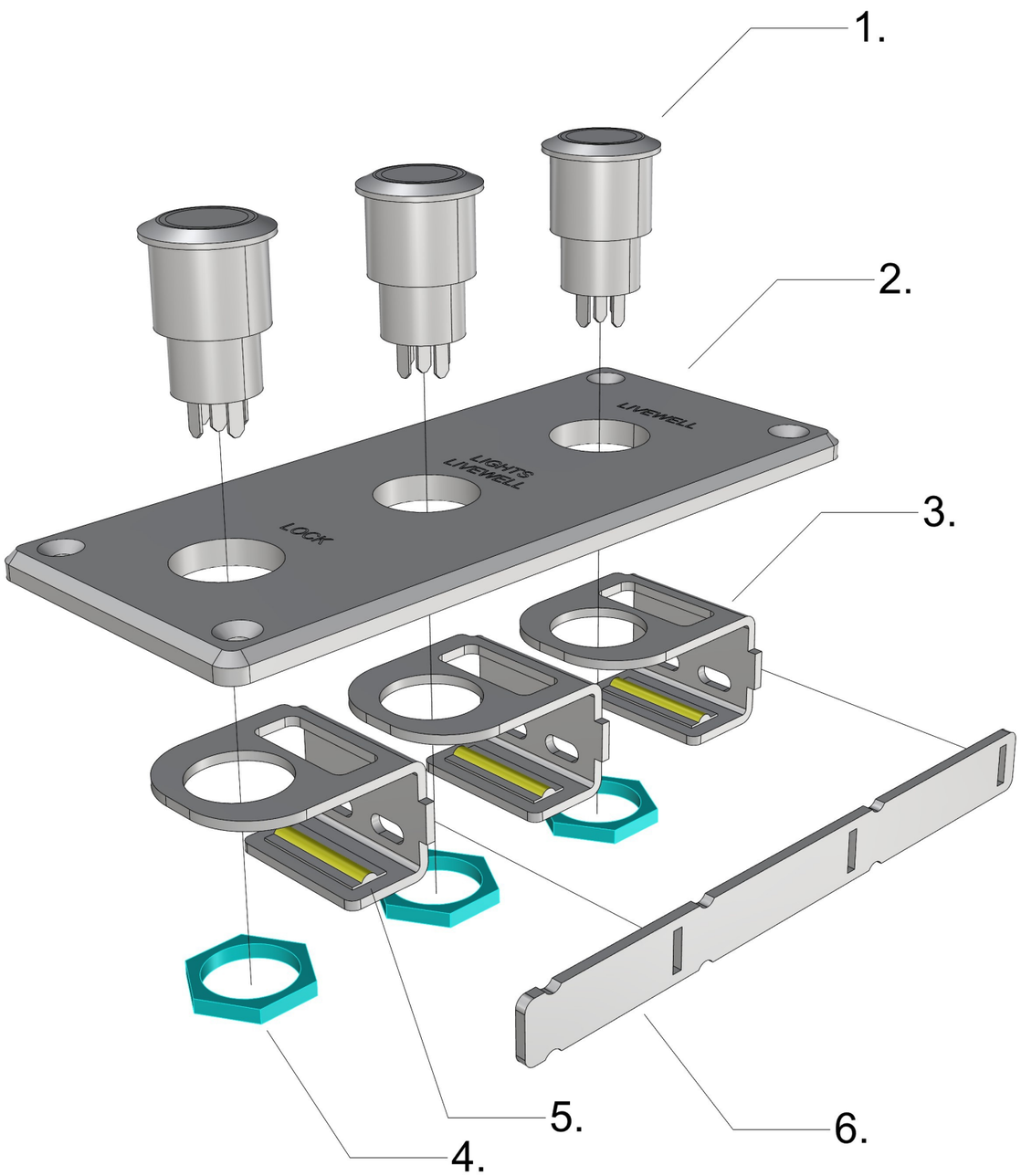

42474_AXOPAR_28_MK3_CCX_LIVEWELL_CONTROL_PANEL_FENDERBOX

1. 3PCS HALO SWITCH (AS IN DIAGRAM)

2. 1PC 42261_AXOPAR_28_MK3_LIVEWELL_CONTROL_PANEL_FENDERBOX_V1

3. 3PCS 42662_AXOPAR_28_MK3_LIVEWELL_CTRL_PANEL_LED_BRACKET_V1

4. 3PCS HALO SWITCH NUT

5. 3PCS 39257 - LED-Strip RCOB 12V 3800-4300K 5m/reel - JL-RCOB-480-40K-12V (25mm)

6. 1PCS 42663_AXOPAR_28_MK3_LIVEWELL_CTRL_PANEL_LED_BRACKET_BAR_V1
! ALIGN 42662s STRAIGHT AND GLUE WITH 37790 - Araldite 2051 !

24.10.2024 / TS (2005259)

Date of modification	Modified by	Description
14.10.2024	PF	C1: 2005259; New drawing

Date	14.10.2024
Drawing by	PF
Sheet rev.	1
Project rev.	C

NAVIX

Copyright by

Axopar		42474	2004468
Boat	Sub-product code	Product code	Project ID
28 MK3	CCX LIVEWELL CONTROL PANEL FENDERBOX	HL	101/ 106
Boat model	Title	Loc	Sheet

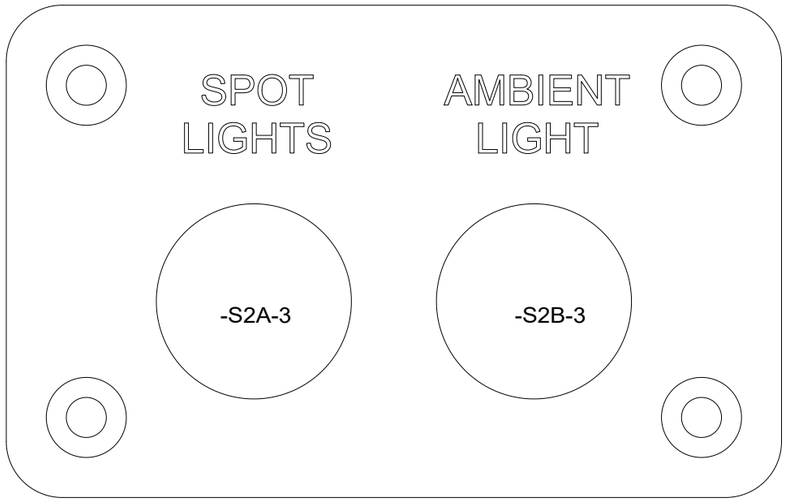

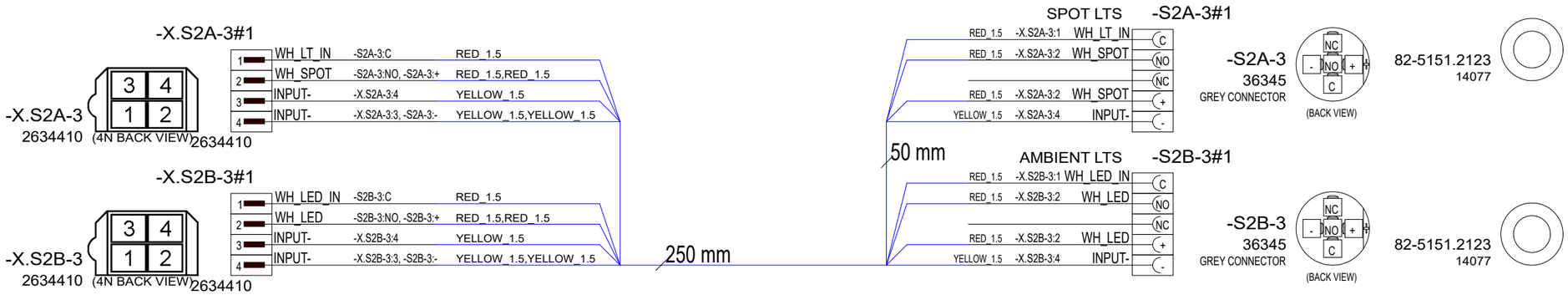

14.5.2024	PF	C1: 2005089; New product	Date	10.5.2024	NAVIX	Axopar	41488	41487	2004468
			Drawing by	PF		Boat	Sub-product code	Product code	Project ID
			Sheet rev.	1		28 MK3	LIGHT SWITCH MAIN CABIN OPEN NON-LP	HL	101/ 106
Date of modification	Modified by	Description	Project rev.	C	Copyright by	Boat model	Title	Loc	Sheet

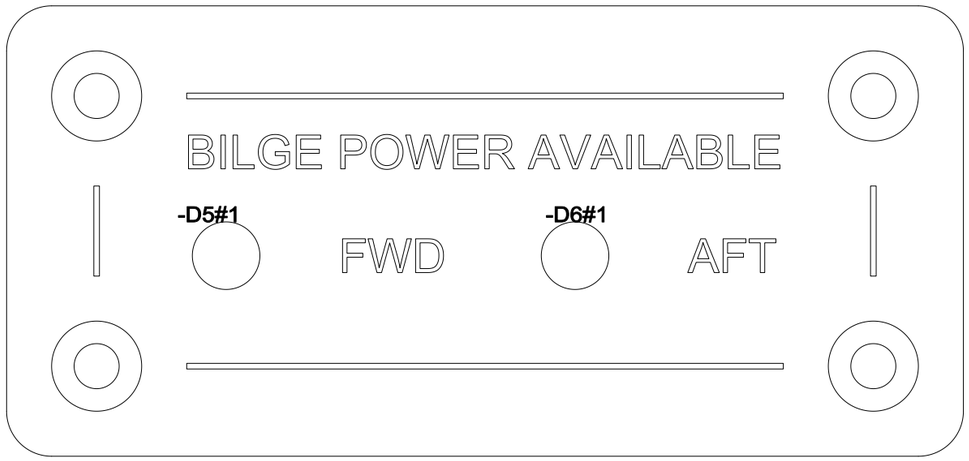

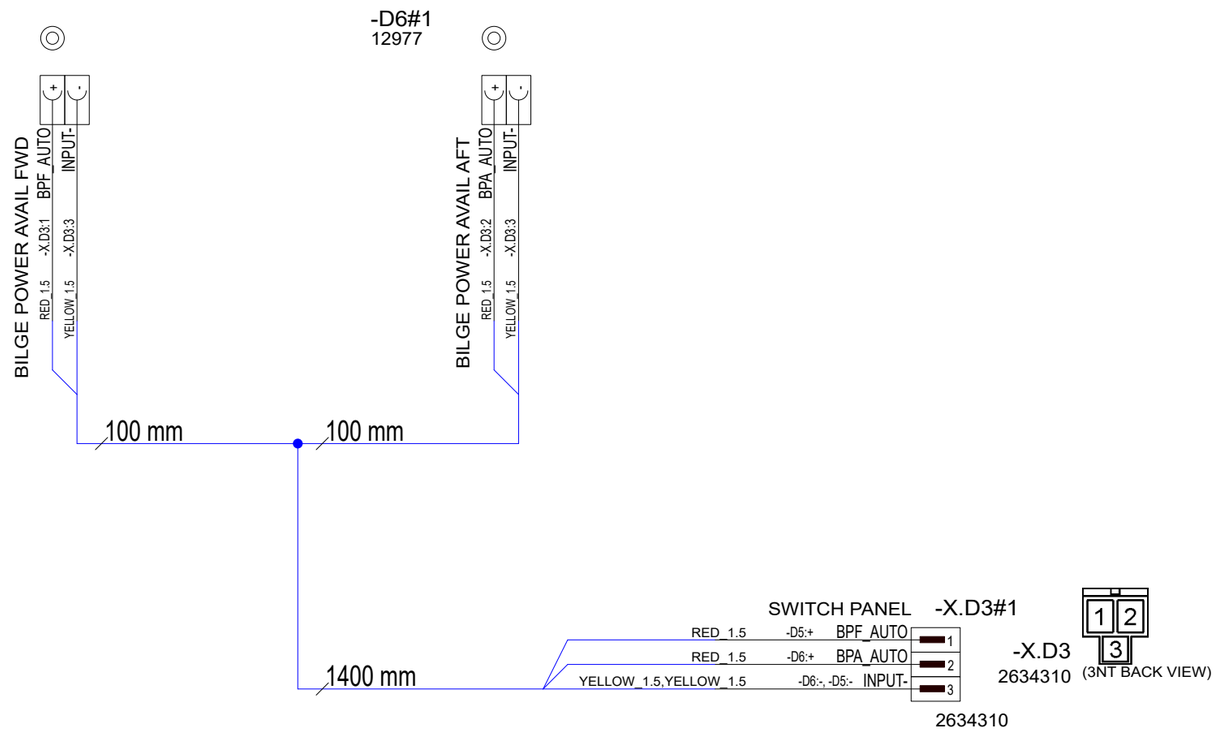

28.5.2024	PF	C1: 2005089; Not modified	Date	22.5.2023	NAVIX	Axopar		38693	2004468
			Drawing by	PF		Boat	Sub-product code	Product code	Project ID
			Sheet rev.	1		28 MK3	BILGE POWER AVAILABILITY PANEL	HL	102 / 106
Date of modification	Modified by	Description	Project rev.	C	Copyright by	Boat model	Title	Loc	Sheet

38693_AXOPAR_28_BILGE_POWER_AVAILABILITY_PANEL

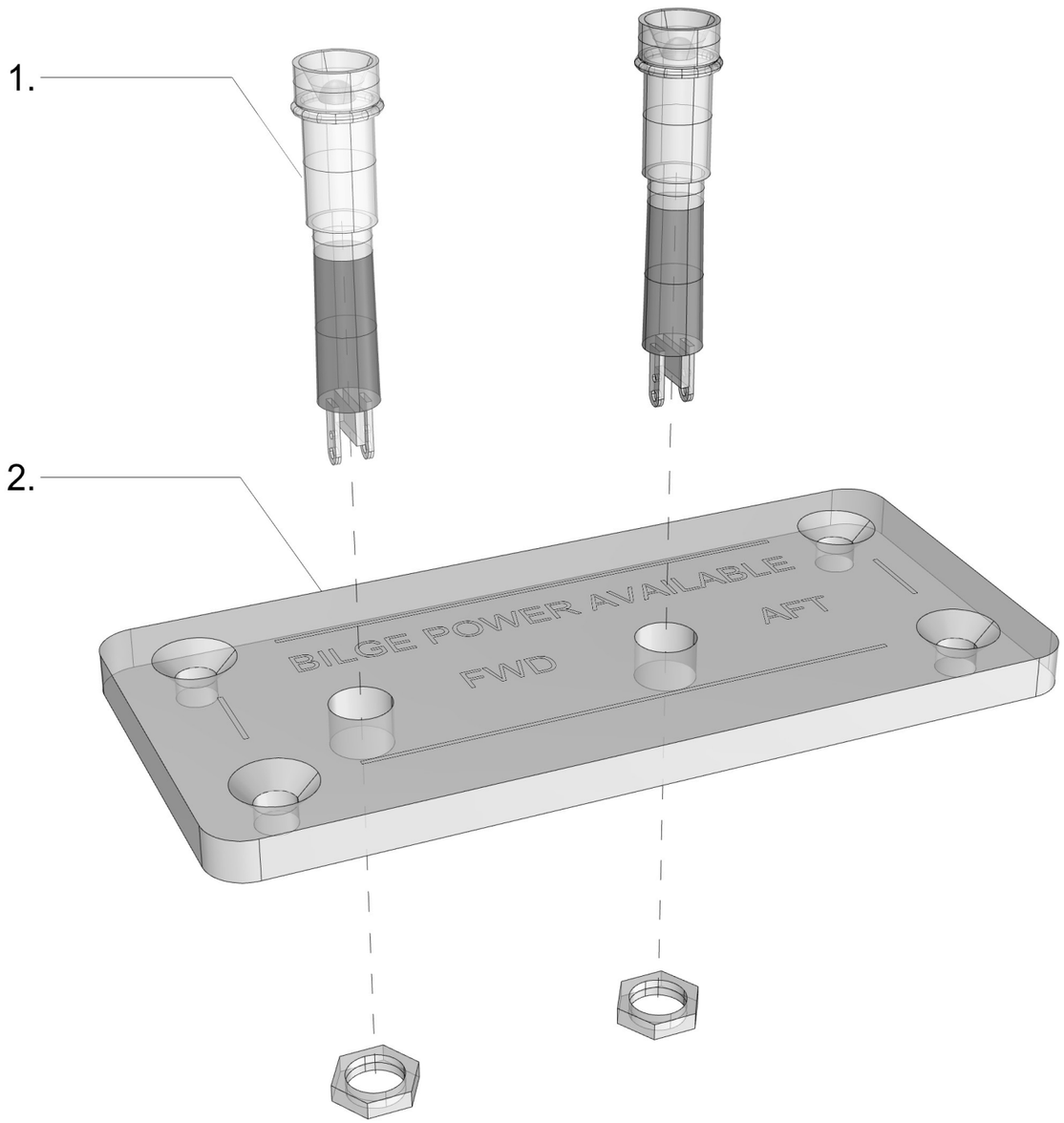

38693_AXOPAR_28_BILGE_POWER_AVAILABILITY_PANEL

1. 2 pcs Led Indicator ø3/6mm, 12V, Chrome frame (as in diagram)

2. 1 pc 39184_AXOPAR_28_BILGE_POWER_AVAILABILITY_PANEL_(WOC)_V1

22.05.2023 / TE (project 2004468)

28.5.2024	PF	C1: 2005089; Not modified	Date	22.5.2023	NAVIX	Axopar Boat		38693 Product code	2004468 Project ID
			Drawing by	PF					
			Sheet rev.	1		28 MK3 Boat model	BILGE POWER AVAILABILITY PANEL Title	HL Loc	103 / 106 Sheet
Date of modification	Modified by	Description	Project rev.	C	Copyright by				

12 Appendix IV: AIS Decontamination – North America

According to

ABYC T-32 Design and Construction in Consideration of Aquatic Invasive Species 7/21

© 2021 American Boat & Yacht Council, Inc

Table of Contents

1 Decontamination criteria based on UMPS III, Table 3 3

2 Example of AIS Owner's Manual Information 4

3 Additional boat-specific recommendations 6

© 2021 Axopar Boats

1 Decontamination criteria based on UMPS III, Table 3

The table is a summary of scientific research indicating the lethal water temperature at point of contact and duration for decontamination. Information is grouped by the location of the boat that is targeted and the life form of Dreissenid mussel targeted (e.g., adult mussel or veliger). Please refer to the *Student Training Curriculum for Watercraft Inspectors and Decontaminators to Prevent and Contain the Spread of Aquatic Invasive Species in the USA* for complete step by step procedures.

	Boat part/ location	**Water temperature**	**Duration[1)] (sec)**	**Type of application**	**Target life stage**
Exterior	Hull	140°F	10	High pressure spray[2)]	Adult
	Trailer	140°F	70	Low pressure spray[3)]	Adult
	PFDs, anchor, paddle	140°F	10	Low pressure spray	Adult or Veliger
Propulsion system	Gimbal	140°F	132	Low pressure spray	Adult
	Engine	140°F[5), 6)]	See note[7)].	Flush[6)]	Veliger
Interior	Ballast tanks	120°F	130	*Low risk* – Flush[4)] *High risk* – Fill and flush	Veliger
	Live well/bait well	120°F	130	Low pressure spray or flush	Veliger
	Bilge	120°F	130	Flush or low pressure spray	Veliger

1) The times listed are the minimum times necessary to achieve mortality.

2) High pressure = 3000 psi.

3) Low pressure = using the pressure from the decontamination unit with no nozzle, not to exceed 60 psi (essentially a garden hose flow).

4) Flush = adding water to a compartment of a boat to treat or force the water out.

5) These temperatures denote the exit temperature (i.e., temperature of water exiting the boat not exiting the wand or flush attachment).

6) When flushing engines with a dedicated connection (not muffs), the pressure should be limited to less than 60 psi to prevent internal engine damage. The maximum input temperature during flushing should not exceed 140°F.

7) *NOTE: Engine flushing relies on the exit temperature as a guideline for decontamination duration.*

© 2021 Axopar Boats

2 Example of AIS Owner's Manual Information

Aquatic invasive species

Aquatic invasive species (AIS) are plants and animals that occur in waters in which they are not native and whose introduction causes or is likely to cause economic or environmental damage or harm to human health. AIS have a negative impact on the waterway, its native species, and recreational and commercial uses of the waterway.

As responsible boaters and citizens, each boat owner should do their part to prevent the spread of these aquatichitchhikers. In many cases, it is also required by law. Check local regulations for any waterway where you will boat.

After each boating trip, follow these three simple steps before you leave the water access to stop the spread of AIS: Clean, Drain, and Dry. This is the boater's way to help protect the environment from the damage that AIS can cause.

Clean

Inspect and remove all aquatic plants, animals, mud, and debris from the boat, engine, trailer, anchor, and any watersports equipment.

- Rinse, scrub or wash, as appropriate, away from storm drains, ditches, or waterways.
- Rinse watercraft, trailer, and equipment with hot water, when possible.
- Flush motor according to owner's manual.

Drain

Completely drain all water from the boat and its compartments, including but not limited to the bilge, wells, lockers, ballast tanks or bags, bait containers, engines, and outdrives.

Dry

Allow the boat to completely dry before visiting any other bodies of water.

© 2021 Axopar Boats

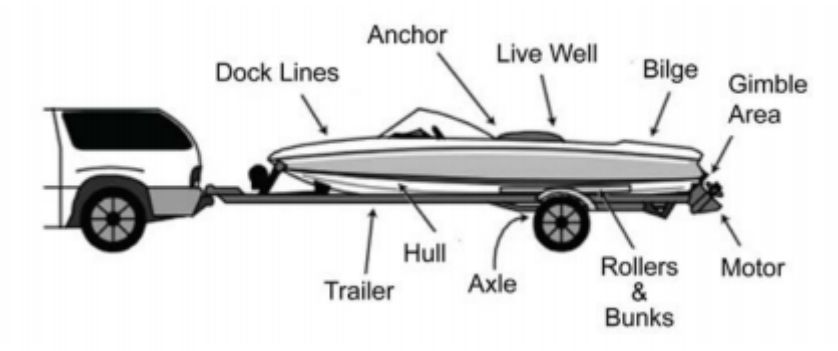

NOTE: Some localities may require inspection or decontamination before and/or after launching. Check state and local laws and regulations for requirements prior to traveling to go boating.

3 Additional boat-specific recommendations

Nonmotorized watercraft

Canoes, rafts, kayaks, rowboats, paddleboats, inflatables, sculls, and other nonmotorized recreational watercraft also require proper treatment.

- **Clean** straps, gear, paddles, floats, ropes, anchors, dip nets, and trailer before leaving the water body.
- **Dry** everything completely between each use and before storing.
- **Wear** quick-dry footwear or bring a second pair of footwear with you when portaging between waterbodies.

Sailboats

- **Clean** centerboard, bilge board, wells, rudderpost, trailer, and other equipment before leaving the water body.
- **Drain** water from boat, motor, bilge, ballast, wells, and portable bait containers before leaving the water body.

Motorized watercraft

- **Inspect** and **clean** motor or engine, including the gimbal area; trailer, including axles, bunkers, and rollers; anchors; dock lines; and equipment before leaving the water body.
- **Drain** live wells, bait containers, ballast and bilge tanks, and engine cooling systems.

Jet boats and personal watercraft (PWCs)

- **Inspect** and **clean** hull, trailer, intake grate, and steering nozzle, etc.
- **Clean** hull, trailer, intake grate, and steering nozzle, etc before leaving the water access.
- **Run** engine 5-10 sec to blow out excess water and vegetation from internal drive before leaving the waterbody.

© 2021 Axopar Boats

13 Appendix V: Transport dimensions

© 2025 Axopar Boats

AXOPAR 29 CCX

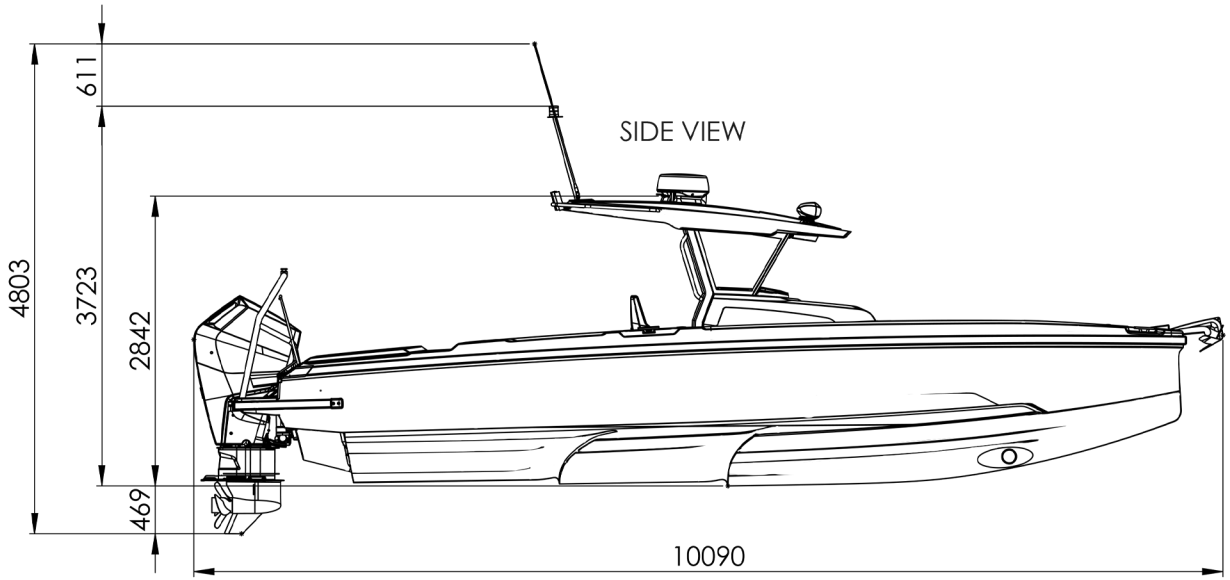

SIDE VIEW

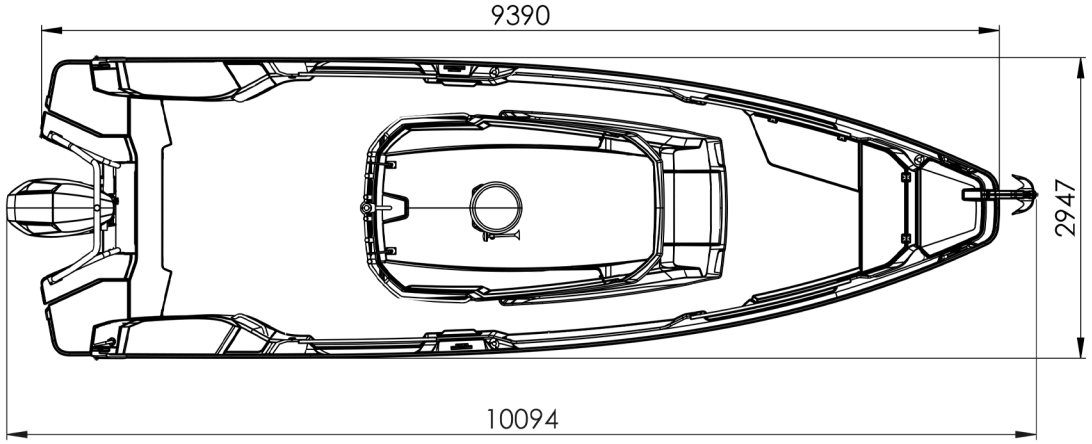

TOP VIEW

AXOPAR 29 CCX

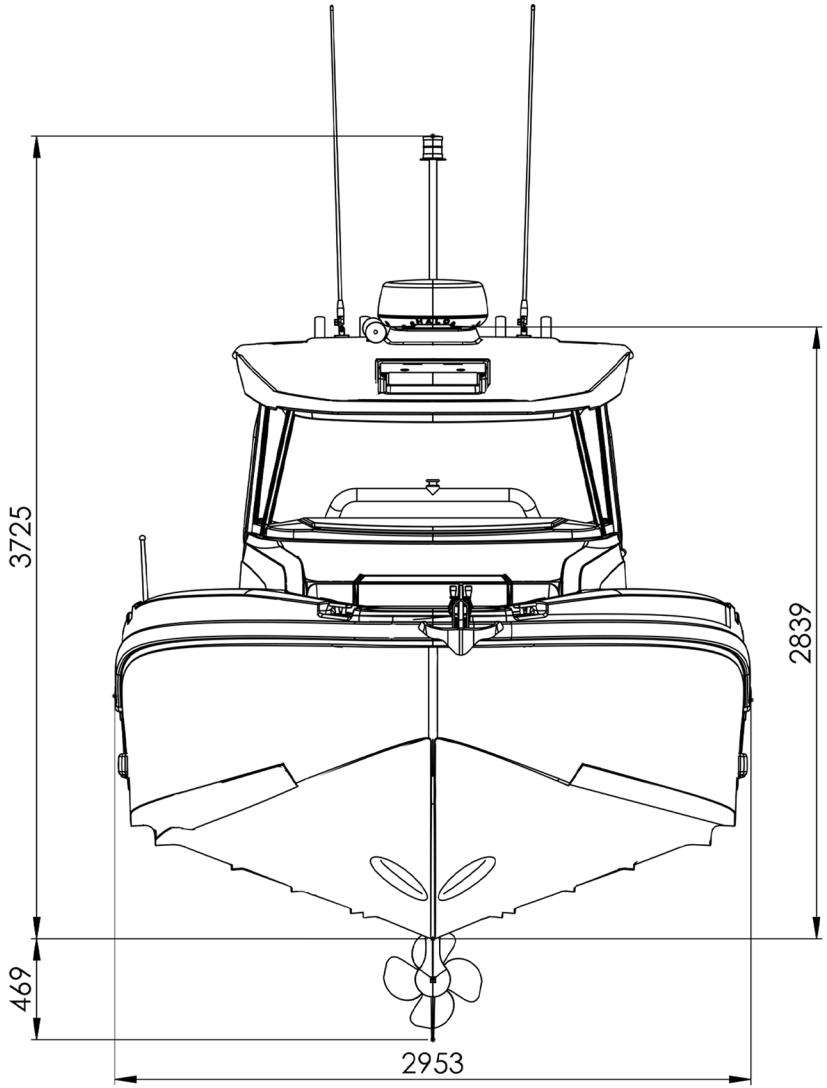

FRONT VIEW

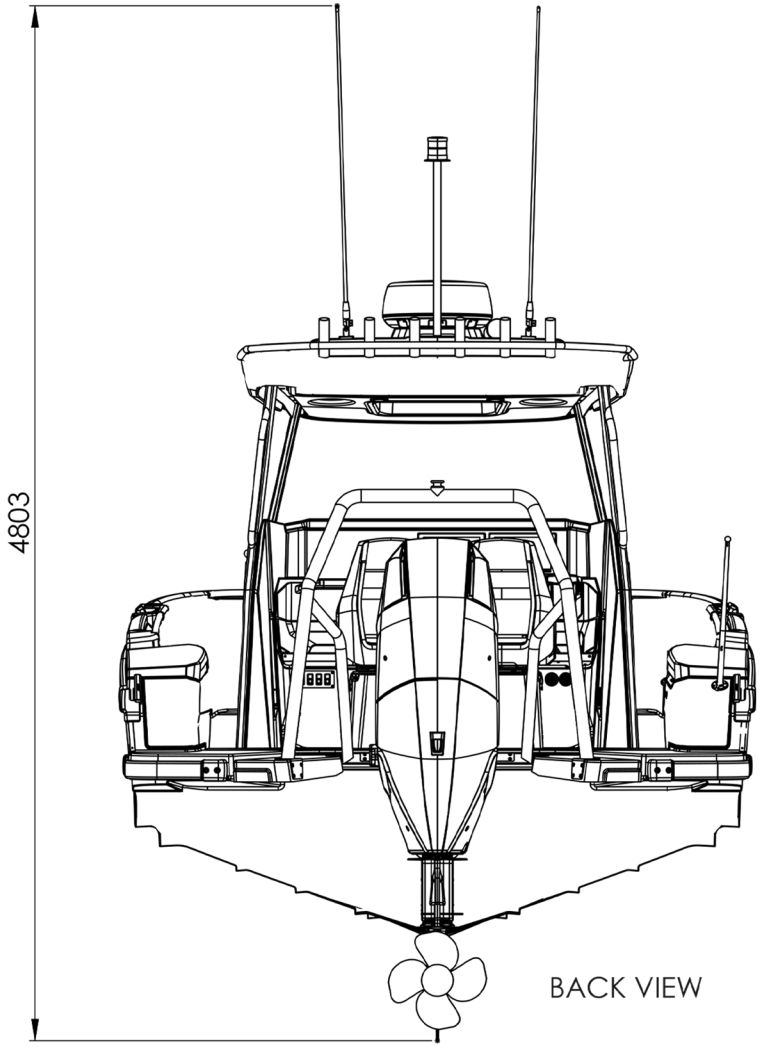

BACK VIEW

14 Appendix VI: Warranty terms

© 2025 Axopar Boats

14.1 Warranty terms: US

© 2025 Axopar Boats

AXOPAR

Limited Warranty for Axopar Boats

US version 1.0

IMPORTANT NOTICE: THIS LIMITED WARRANTY IS SUBJECT TO BINDING ARBITRATION AND A WAIVER OF CLASS ACTIONS, AS DESCRIBED IN SECTION 7. Please also read the limitations and disclaimers in Sections 3(D), 3(E) and 6 regarding Boats.

Limited Warranty

Axopar Boats Ltd ("*Axopar*") warrants to the original retail purchaser ("*Purchaser*") of an Axopar boat manufactured and equipped with a hull identification number by Axopar ("*Boat*") and sold at retail by an authorized dealer ("*Dealer*") that Axopar will repair or replace defective materials and workmanship found during the applicable warranty period, subject to the limitations, exclusions and other conditions provided below. The decision to repair or replace will be made by Axopar in its sole discretion, and all repairs must occur at the location specified by Axopar (the "*Service Location*"). This Limited Warranty gives the Purchaser specific legal rights and Purchaser may have other legal rights, which vary from state to state.

1. Applicability

This Limited Warranty is valid worldwide during the applicable warranty period and applies only to Boats purchased by consumers and operated under normal, non-commercial use in compliance with the relevant owner's manual. Any warranty for Boats intended for commercial use must be separately agreed upon in writing between Axopar and the Purchaser.

The Limited Warranty also covers any equipment installed in the Boat by Axopar as an integral part of the delivery but excludes (i) equipment covered by a separate warranty, as further specified below in Sections 2 (Warranty Provider) and 3 (Warranty Period and Limitations) and (ii) any items installed by the Dealer in the Boat or included by the Dealer with the Boat. Equipment acquired by the Purchaser from third parties and which are not included in the original delivery are not covered under this Limited Warranty.

The hull identification number of the Boat and other particulars relevant to this Limited Warranty are recorded in the applicable sales contract and/or in the Boat's warranty certificate.

2. Warranty Provider

This Limited Warranty is provided solely by Axopar. Contact details are shown in the warranty certificate provided to the Purchaser upon delivery of the Boat. All warranties provided by the manufacturers and distributors of components, equipment and parts of the Boat are hereby assigned to the Purchaser to the extent permitted by the applicable manufacturers and distributors, as Purchaser's sole and exclusive remedy with respect to those items.

3. Warranty Period and Limitations

The Limited Warranty is valid from the delivery date of the Boat to the Purchaser, as reflected in the Boat's warranty certificate (the "*Delivery Date*"), for the time periods identified below.

(A) ***Five-Year Limited Warranty on Structural Hull:***

Axopar will repair or replace any substantial defect in material or workmanship in the Boat's structural hull that is reported within five years from the Delivery Date. The structural hull means the fiberglass molded shell and all its integral structural components. A defect is substantial if it causes the Boat to be unfit or unsafe for general use as a pleasure craft under normal operating conditions.

(B) ***Two-Year Limited Warranty on Components Manufactured or Installed by Axopar:***

Axopar will repair or replace any components manufactured or installed by Axopar that are defective in factory materials or workmanship and are reported within two years from the Delivery Date (and are not already addressed in the specific warranties provided in paragraphs (A) and (C)).

(C) ***One-Year Limited Warranty on Upholstered Items, Canvas, Floor Materials, Other Coating and Painted Parts:***

Axopar will repair or replace any upholstered items, canvas, floor materials, other coating, and painted parts manufactured or installed by Axopar that are defective in factory materials or workmanship and are reported within one year from the Delivery Date.

(D) ***Exclusions***

The Limited Warranty does not apply to or cover the following items: (1) any costs incurred from hauling or transporting the Boat to and from the Service Location; (2) any equipment, parts or accessories not installed by Axopar or that carry their own individual warranties provided by third parties, including but not limited to engines, propellers, pre-rigging equipment, batteries, generators, A/C units, steering mechanisms and other electronic equipment; (3) minor changes to the Boat's external surfaces that have no influence on the strength or serviceability of the Boat, including but not limited to any damage, deterioration, fading or discoloration or mold of cushions, cracking, fading or oxidation of gel coat, stress lines, anti-fouling bottom paint or other slight irregularities in paint work, lacquer work, woodwork or chrome finish or other minor surface blemishes; (4) windshield damage or leakage; (5) any damage resulting from Purchaser's or a third party's negligence, willful misconduct, improper use of the Boat, overloading, powering in excess of the recommended maximum horsepower, improper rigging, misuse or alterations or repairs or attempted repairs on the Boat not authorized by Axopar, including use of an improper trailer, Boat lift or sling; (6) failure of the Purchaser or any third party to use, maintain or store the Boat as specified in the owner's manual, or any other failure to provide reasonable care and maintenance; (7) normal wear and tear items, including but not limited to ropes, filters, bulbs and batteries; (8) any representation or implication of the Boat's properties or characteristics, such as speed, weight, range, performance or fuel consumption; (9) any failure or defect not reported to Axopar or Dealer in accordance with Section 4 (Warranty Procedures) of this Limited Warranty; (10) any failure or defect arising from repairs made by unauthorized service providers; (11) any failure or defect arising from acts of nature; and (12) any Boat that was previously salvaged or declared a total loss or constructive loss for any reason.

(E) ***Voiding the Limited Warranty***

This warranty becomes void if: (1) Purchaser sells or otherwise conveys the Boat to a third party during the warranty period and Axopar is not provided with the bill of sale of the Boat and/or the contact information of the new owner; (2) Purchaser uses the Boat in other than non-commercial activities; (3) the Boat is used in a competitive event; (4) any unauthorized modifications or changes are made to the Boat (e.g. structural modification or modifications to electrical systems on board or the programming of its engine or other systems); or (5) the Boat is salvaged or declared a total loss or constructive loss for any reason.

4. Warranty Procedures

To obtain warranty service, Purchaser must notify the Dealer about the failure or defect within a reasonable time after becoming aware of it or after Purchaser should have become aware of it. Upon detecting a defect, the Purchaser is required to take all reasonable steps necessary to prevent the defect from deteriorating further. When reporting any defect, the Purchaser must provide the Boat's hull identification number, a copy of the warranty certificate, a reasonable number of clear and detailed photos of the defect, and a supported or documented explanation regarding when the Boat was purchased and the Dealer from which it was purchased.

After providing notice of the defect to the Dealer, the Dealer will notify Purchaser of the procedures to follow regarding this Limited Warranty. Dealer will then notify Axopar, and upon being notified of the warranty claim by Dealer, Axopar is solely responsible for determining and authorizing in writing the remedial action to be performed.

5. Axopar's Warranty Responsibilities

Axopar has always the right to repair a defect covered by this Limited Warranty if, in view of the nature and extent of the defect, it can be done within a reasonable time and in such a way that it does not result in repair costs or material detriment to the Purchaser. All repairs shall be carried out in a way and at the Service Location designated by Axopar.

If Axopar determines that repair is not possible, Purchaser has the right to a discount proportionate to the defect. Alternatively, Axopar may, in its sole discretion, offer to Purchaser a replacement Boat with a market value equal to the replaced Boat's market value (considering the Boat's age and condition) if it did not have that specific unrepairable defect.

If Axopar reasonably determines that the Boat defect is not covered by the Limited Warranty, Axopar has the right to charge the Purchaser for any costs that arise from inspecting and determining the defect and its cause. Any repair costs and expenses are subject mutual agreement by Axopar and the Purchaser.

6. Sole Remedy and Other Limitations

The repair, discount and replacement obligations specified in Section 5 (Axopar's Warranty Responsibilities) for parts or materials covered by this Limited Warranty are Purchaser's sole and exclusive remedy, and Axopar's sole obligations, for any claims whatsoever or any losses resulting from product failure.

This Limited Warranty the final, complete and exclusive warranty offered by Axopar regarding the Boat, and no other person or entity (including the Dealer or their respective sales agents or employees) is authorized to make any other warranties or representations on behalf of Axopar. **EXCEPT FOR THE EXPRESS LIMITED WARRANTIES PROVIDED IN THIS LIMITED WARRANTY, AXOPAR DISCLAIMS ALL OTHER EXPRESS AND IMPLIED WARRANTIES AND REPRESENTATIONS OF ANY KIND, INCLUDING ANY IMPLIED WARRANTY OF MERCHANTABILITY, AND FITNESS FOR A PARTICULAR PURPOSE. EXCEPT AS OTHERWISE PROVIDED IN THIS LIMITED WARRANTY, ALL BOATS ARE PROVIDED "AS IS" AND "WITH ALL FAULTS".** If and to the extent that an implied warranty cannot be disclaimed, that warranty is limited to duration of the respective express Limited Warranty provided herein. Some states do not allow the exclusion of implied warranties or do not allow limitations on the amount of time an implied warranty lasts, so the above limitations may not apply to some Purchasers.

To the extent permitted by applicable law, Axopar disclaims all liability to Purchaser and third parties for any economic loss arising from claims of product failure, negligence, defective design, lack of seaworthiness, manufacturing defect and any other liability not expressly covered in this Limited Warranty. **TO THE EXTENT PERMITTED BY APPLICABLE LAW, NEITHER AXOPAR NOR DEALER SHALL UNDER ANY CIRCUMSTANCES BE LIABLE FOR ANY INDIRECT, CONSEQUENTIAL, SPECIAL, ENHANCED, OR PUNITIVE DAMAGES, INCLUDING LOSS OF THE BOAT, PROFIT, PRODUCTIVITY, BUSINESS, CONTRACTS, REVENUES OR ANTICIPATED SAVINGS, OR INCREASED COSTS OR EXPENSES, AND IN NO EVENT SHALL AXOPAR'S LIABILITY EXCEED THE ACTUAL AMOUNT PAID BY PURCHASER FOR THE BOAT.** Some states do not allow the exclusion or limitation of incidental or consequential damages, so the above limitation or exclusion may not apply to every Purchaser.

If, at any time, any provision of this Limited Warranty is or becomes illegal, invalid or unenforceable in any respect under the laws of any jurisdiction, the legality, validity or enforceability of the remaining provisions will remain unaffected.

7. Arbitration and Limitation on Actions

PLEASE READ THIS SECTION CAREFULLY. WE WANT YOU TO KNOW HOW IT AFFECTS YOUR RIGHTS.

(A) *Customer Service and FAQs*

In the unlikely event that an issue, concern or claim (including legal claims) remains unresolved after the procedure specified in Section 4 (Warranty Procedures) and the issue has been escalated to Axopar, Purchaser and Axopar each agree to discuss any issue informally for at least 30 days. Purchaser can do this by sending your full name and contact information, your concern and your requested solution to Axopar at warranty@axopar.fi, Attn: Legal Department. If Axopar would like to discuss an issue with Purchaser, Axopar will contact you at the address provided to the Dealer.

(B) *Agreement to Arbitrate*

If an agreed solution is not reached at the end of the 30-day discussion period, Purchaser and Axopar each agree that any issue, concern or claim (including legal claims) that either may have arising out of or relating to this Limited Warranty must be resolved through final binding arbitration before the American Arbitration Association using its Consumer Arbitration Rules, available at https://www.adr.org/sites/default/files/Consumer%20Rules.pdf (the "*AAA Rules*") or available by calling the American Arbitration

Association at 1-800-778-7879. As an exception to this agreement to arbitrate, Axopar gives you the right to pursue in small claims court any claim that is within that court's jurisdiction, so long as you proceed solely on an individual basis. A party who intends to seek arbitration must first send to the other party, by certified or registered mail, a written notice of dispute. Purchaser may download or copy a form notice of dispute and a form to initiate arbitration from www.adr.org. Unless Purchaser and Axopar agree otherwise, the arbitration hearings will take place in a reasonably convenient location for both parties as determined by the arbitrator in accordance with the AAA Rules, and the hearings may be conducted in-person, by videoconference, phone or by the exchange of documents. The arbitrator's decision will be binding and may be enforced and entered as a judgment in any court of competent jurisdiction. If the arbitrator rules against Axopar, Axopar will reimburse Purchaser for reasonable attorneys' fees and costs, regardless of who initiated the arbitration. However, if the arbitrator rules in Axopar's favor, Axopar will not seek reimbursement of attorneys' fees and costs, regardless of who initiated the arbitration.

(C) *Time Limitation; No Class Actions*

To help resolve any issues between us promptly and directly, Axopar and Purchaser agree to begin any arbitration under this Limited Warranty within one year after the claim first arose; otherwise, the claim is waived. Axopar and Purchaser also agree to arbitrate in each of our individual capacities only – not as a representative or member of a class – and each of us expressly waives any right to file a class action or seek relief on a class action basis. Furthermore, unless Purchaser and Axopar agree in writing, the arbitrator may not consolidate more than one person's claims and may not otherwise preside over any form of a representative of class proceeding.

(D) *Confidentiality*

All arbitration proceedings are confidential, unless both Purchaser and Axopar agree otherwise. Arbitration orders and awards required to be filed with applicable courts of competent jurisdiction are not confidential and may be disclosed by the parties to such courts. A party who improperly discloses confidential information will be subject to sanctions. The arbitrator and forum may disclose case filings, case dispositions, and other case information as required by a court order of proper jurisdiction.

14.2 Warranty terms: non-US

© 2025 Axopar Boats

AXOPAR

Limited Warranty for Axopar Boats

Non-US version 1.0

Limited Warranty

Axopar Boats Ltd ("*Axopar*") warrants to the original retail purchaser ("*Purchaser*") of an Axopar boat manufactured and equipped with a hull identification number by Axopar ("*Boat*") and sold at retail by an authorized dealer ("*Dealer*") that Axopar will repair or replace defective materials and workmanship found during the applicable warranty period, subject to the limitations, exclusions and other conditions provided below. The decision to repair or replace will be made by Axopar in its sole discretion, and all repairs must occur at the location specified by Axopar (the "*Service Location*"). This Limited Warranty gives the Purchaser specific legal rights and Purchaser may have other legal rights, which vary from country to country.

1. Applicability

This Limited Warranty is valid worldwide during the applicable warranty period and applies only to Boats purchased by consumers and operated under normal, non-commercial use in compliance with the relevant Axopar owner's manual. Any warranty for Boats intended for commercial use must be separately agreed upon in writing between Axopar and the Purchaser.

The Limited Warranty also covers any equipment installed in the Boat by Axopar as an integral part of the delivery but excludes (i) equipment covered by a separate warranty, as further specified below in Sections 2 (Warranty Provider) and 3 (Warranty Period and Limitations) and (ii) any items installed by the Dealer in the Boat or included by the Dealer with the Boat. Equipment acquired by the Purchaser from third parties and which are not included in the original delivery are not covered under this Limited Warranty.

The hull identification number of the Boat and other particulars relevant to this Limited Warranty are recorded in the applicable sales contract and/or in the Boat's warranty certificate.

2. Warranty Provider

This Limited Warranty is provided solely by Axopar. Contact details are shown in the warranty certificate provided to the Purchaser upon delivery of the Boat. All warranties provided by the manufacturers and distributors of components, equipment and parts of the Boat are hereby assigned to the Purchaser to the extent permitted by the applicable manufacturers and distributors, as Purchaser's sole and exclusive remedy with respect to those items.

3. Warranty Period and Limitations

The Limited Warranty is valid from the delivery date of the Boat to the Purchaser, as reflected in the Boat's warranty certificate (the "*Delivery Date*"), for the time periods identified below.

(A) ***Five-Year Limited Warranty on Structural Hull:***

Axopar will repair or replace any substantial defect in material or workmanship in the Boat's structural hull that is reported within five years from the Delivery Date. The structural hull means the fiberglass molded shell and all its integral structural components. A defect is substantial if it causes the Boat to be unfit or unsafe for general use as a pleasure craft under normal operating conditions.

(B) ***Two-Year Limited Warranty on Components Manufactured or Installed by Axopar:***

Axopar will repair or replace any components manufactured or installed by Axopar that are defective in factory materials or workmanship and are reported within two years from the Delivery Date (and are not already addressed in the specific warranties provided in paragraphs (A) and (C)).

(C) ***One-Year Limited Warranty on Upholstered Items, Canvas, Floor Materials, Other Coating and Painted Parts:***

Axopar will repair or replace any upholstered items, canvas, floor materials, other coating, and painted parts manufactured or installed by Axopar that are defective in factory materials or workmanship and are reported within one year from the Delivery Date.

(D) ***Exclusions***

The Limited Warranty does not apply to or cover the following items: (1) any costs incurred from hauling or transporting the Boat to and from the Service Location; (2) any equipment, parts or accessories not installed by Axopar or that carry their own individual warranties provided by third parties, including but not limited to engines, propellers, pre-rigging equipment, batteries, generators, A/C units, steering mechanisms and other electronic equipment; (3) minor changes to the Boat's external surfaces that have no influence on the strength or serviceability of the Boat, including but not limited to any damage, deterioration, fading or discoloration or mold of cushions, cracking, fading or oxidation of gel coat, stress lines, anti-fouling bottom paint or other slight irregularities in paint work, lacquer work, woodwork or chrome finish or other minor surface blemishes; (4) windshield damage or leakage; (5) any damage resulting from Purchaser's or a third party's negligence, willful misconduct, improper use of the Boat, overloading, powering in excess of the recommended maximum horsepower, improper rigging, misuse or alterations or repairs or attempted repairs on the Boat not authorized by Axopar, including use of an improper trailer, Boat lift or sling; (6) failure of the Purchaser or any third party to use, maintain or store the Boat as specified in the owner's manual, or any other failure to provide reasonable care and maintenance; (7) normal wear and tear items, including but not limited to ropes, filters, bulbs and batteries; (8) any representation or implication of the Boat's properties or characteristics, such as speed, weight, range, performance or fuel consumption; (9) any failure or defect not reported to Axopar or Dealer in accordance with Section 4 (Warranty Procedures) of this Limited Warranty; (10) any failure or defect arising from repairs made by unauthorized service providers; (11) any failure or defect arising from acts of nature; and (12) any Boat that was previously salvaged or declared a total loss or constructive loss for any reason.

(E) ***Voiding the Limited Warranty***

This warranty becomes void if: (1) Purchaser sells or otherwise conveys the Boat to a third party during the warranty period and Axopar is not provided with the bill of sale of the Boat

and/or the contact information of the new owner; (2) Purchaser uses the Boat in other than non-commercial activities; (3) the Boat is used in a competitive event; (4) any unauthorized modifications or changes are made to the Boat (e.g. structural modification or modifications to electrical systems on board or the programming of its engine or other systems); or (5) the Boat is salvaged or declared a total loss or constructive loss for any reason.

4. Warranty Procedures

To obtain warranty service, Purchaser must notify the Dealer about the failure or defect within a reasonable time after becoming aware of it or after Purchaser should have become aware of it. Upon detecting a defect, the Purchaser is required to take all reasonable steps necessary to prevent the defect from deteriorating further. When reporting any defect, the Purchaser must provide the Boat's hull identification number, a copy of the warranty certificate, a reasonable number of clear and detailed photos of the defect, and a supported or documented explanation regarding when the Boat was purchased and the Dealer from which it was purchased.

After providing notice of the defect to the Dealer, the Dealer will notify Purchaser of the procedures to follow regarding this Limited Warranty. Dealer will then notify Axopar, and upon being notified of the warranty claim by Dealer, Axopar is solely responsible for determining and authorizing in writing the remedial action to be performed.

5. Axopar's Warranty Responsibilities

Axopar has always the right to repair a defect covered by this Limited Warranty if, in view of the nature and extent of the defect, it can be done within a reasonable time and in such a way that it does not result in repair costs or material detriment to the Purchaser. All repairs shall be carried out in a way and at the Service Location designated by Axopar.

If Axopar determines that repair is not possible, Purchaser has the right to a discount proportionate to the defect. Alternatively, Axopar may, in its sole discretion, offer to Purchaser a replacement Boat with a market value equal to the replaced Boat's market value (considering the Boat's age and condition) if it did not have that specific unrepairable defect.

If Axopar reasonably determines that the Boat defect is not covered by the Limited Warranty, Axopar has the right to charge the Purchaser for any costs that arise from inspecting and determining the defect and its cause. Any repair costs and expenses are subject mutual agreement by Axopar and the Purchaser.

6. Sole Remedy and Other Limitations

The repair, discount and replacement obligations specified in Section 5 (Axopar's Warranty Responsibilities) for parts or materials covered by this Limited Warranty are Purchaser's sole and exclusive remedy, and Axopar's sole obligations, for any claims whatsoever or any losses resulting from product failure.

This Limited Warranty the final, complete and exclusive warranty offered by Axopar regarding the Boat, and no other person or entity (including the Dealer or its respective sales agents or employees) is authorized to make any other warranties or representations on behalf of Axopar. **EXCEPT FOR THE EXPRESS LIMITED WARRANTIES PROVIDED IN THIS LIMITED WARRANTY, AXOPAR DISCLAIMS ALL OTHER EXPRESS AND IMPLIED WARRANTIES AND REPRESENTATIONS OF ANY KIND, INCLUDING ANY IMPLIED WARRANTY OF MERCHANTABILITY, AND FITNESS FOR A PARTICULAR PURPOSE. EXCEPT AS OTHERWISE PROVIDED IN THIS LIMITED WARRANTY, ALL BOATS ARE PROVIDED "AS IS" AND "WITH ALL FAULTS".** If and to the extent that an implied warranty cannot be disclaimed, that warranty is limited to duration of the respective express Limited Warranty provided herein. Some countries do not allow the exclusion of implied warranties or do not allow limitations on the amount of time an implied warranty lasts, so the above limitations may not apply to some Purchasers.

To the extent permitted by applicable law, Axopar disclaims all liability to Purchaser and third parties for any economic loss arising from claims of product failure, negligence, defective design, lack of seaworthiness, manufacturing defect and any other liability not expressly covered in this Limited Warranty. **TO THE EXTENT PERMITTED BY APPLICABLE LAW, NEITHER AXOPAR NOR DEALER SHALL UNDER ANY CIRCUMSTANCES BE LIABLE FOR ANY INDIRECT, CONSEQUENTIAL, SPECIAL, ENHANCED, OR PUNITIVE DAMAGES, INCLUDING LOSS OF THE BOAT, PROFIT, PRODUCTIVITY, BUSINESS, CONTRACTS, REVENUES OR ANTICIPATED SAVINGS, OR INCREASED COSTS OR EXPENSES, AND IN NO EVENT SHALL AXOPAR'S LIABILITY EXCEED THE ACTUAL AMOUNT PAID BY PURCHASER FOR THE BOAT.** Some countries do not allow the exclusion or limitation of incidental or consequential damages, so the above limitation or exclusion may not apply to every Purchaser.

If, at any time, any provision of this Limited Warranty is or becomes illegal, invalid or unenforceable in any respect under the laws of any jurisdiction, the legality, validity or enforceability of the remaining provisions will remain unaffected.

7. Arbitration and Limitation on Actions

PLEASE READ THIS SECTION CAREFULLY. WE WANT YOU TO KNOW HOW IT AFFECTS YOUR RIGHTS.

(A) *Customer Service and FAQs*

In the unlikely event that an issue, concern or claim (including legal claims) remains unresolved after the procedure specified in Section 4 (Warranty Procedures) and the issue has been escalated to Axopar, Purchaser and Axopar each agree to discuss any issue informally for at least 30 days. Purchaser can do this by sending your full name and contact information, your concern and your requested solution to Axopar at warranty@axopar.fi, Attn: Legal Department. If Axopar would like to discuss an issue with Purchaser, Axopar will contact you at the address provided to the Dealer.

(B) *Agreement to Arbitrate*

If an agreed solution is not reached at the end of the 30-day discussion period, Purchaser and Axopar each agree that any issue, concern or claim (including legal claims) that either may have arising out of or relating to this Limited Warranty must be resolved through final binding arbitration. The arbitrator's decision will be binding and may be enforced and entered as a judgment in any court of competent jurisdiction. If the arbitrator rules against Axopar, Axopar will reimburse Purchaser for reasonable attorneys' fees and costs, regardless of who initiated the arbitration. However, if the arbitrator rules in Axopar's favor, Axopar will not seek reimbursement of attorneys' fees and costs, regardless of who initiated the arbitration.

(C) *Time Limitation; No Class Actions*

To help resolve any issues between us promptly and directly, Axopar and Purchaser agree to begin any arbitration under this Limited Warranty within one year after the claim first arose; otherwise, the claim is waived. Axopar and Purchaser also agree to arbitrate in each of our individual capacities only – not as a representative or member of a class – and each of us expressly waives any right to file a class action or seek relief on a class action basis. Furthermore, unless Purchaser and Axopar agree in writing, the arbitrator may not consolidate more than one person's claims and may not otherwise preside over any form of a representative of class proceeding.

(D) *Confidentiality*

All arbitration proceedings are confidential, unless both Purchaser and Axopar agree otherwise. Arbitration orders and awards required to be filed with applicable courts of competent jurisdiction are not confidential and may be disclosed by the parties to such courts. A party who improperly discloses confidential information will be subject to sanctions. The arbitrator and forum may disclose case filings, case dispositions, and other case information as required by a court order of proper jurisdiction.